UELAND TREE FARM MINERAL RESOURCE DEVELOPMENT (PHASE 1)

A PORTION OF THE SE 1/4 OF SECTION 7, TOWNSHIP 24 NORTH , RANGE 1 EAST, W.M.

KITSAP COUNTY, WASHINGTON

COVER SHEET

Draft

GRAPHIC SCALE

0 80 160

1 INCH = 80 FEET (22"x34")

1 INCH = 160 FEET (11"x17")

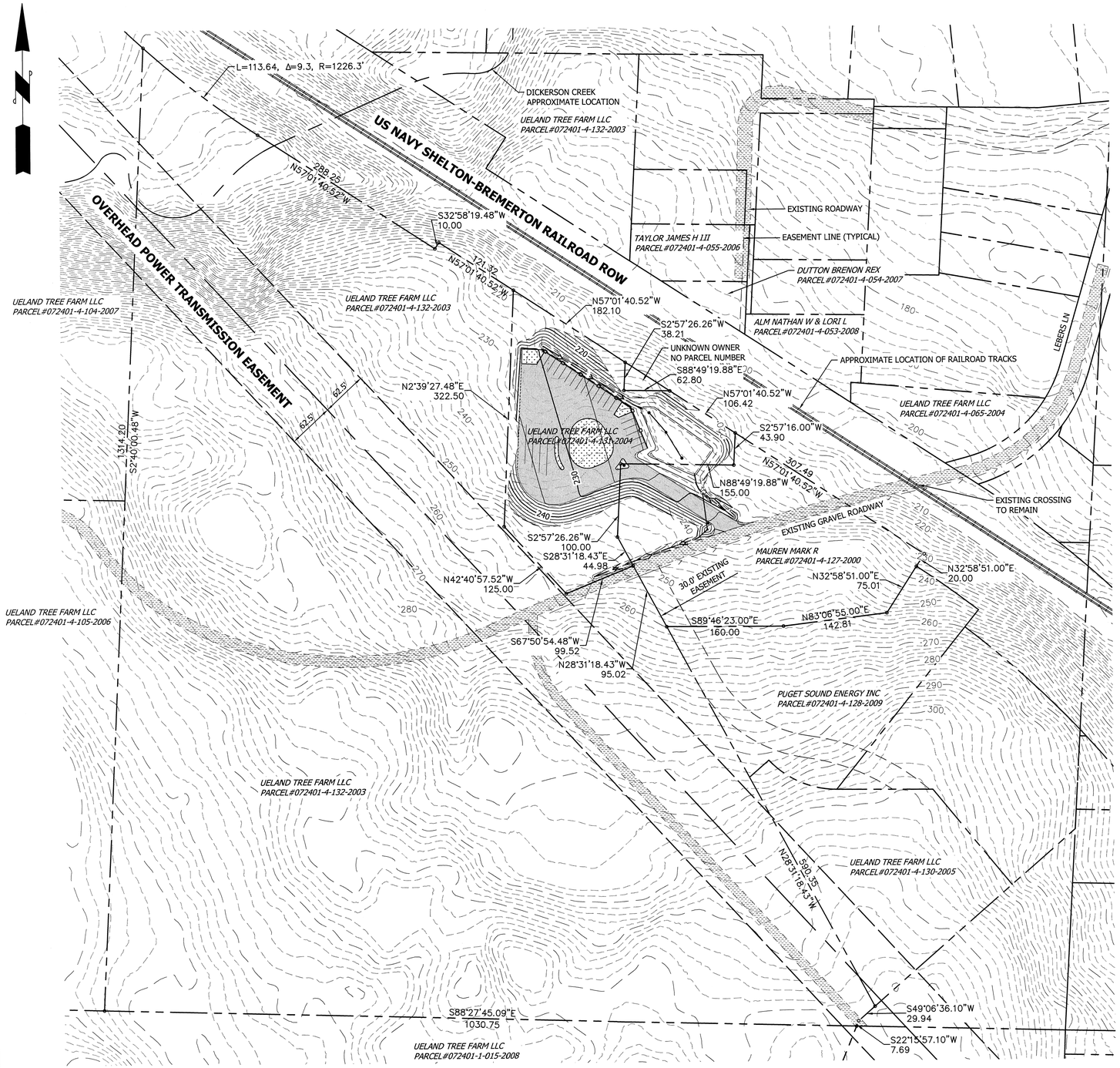

UTILITY NOTE

EXISTING UTILITY INFORMATION DEPICTED ON THESE PLANS WAS OBTAINED FROM BEST AVAILABLE SOURCES AT THE TIME OF DESIGN. CONTRACTOR SHALL BE SOLELY RESPONSIBLE FOR THE RELOCATION OF EXISTING UNDERGROUND CONFLICTING UTILITIES DEPICTED OR NOT DEPICTED ON THESE PLANS.

FILL SPECIFICATION

FILL MATERIAL SHALL NOT CONTAIN PETROLEUM PRODUCTS, OR SUBSTANCES WHICH ARE HAZARDOUS, DANGEROUS, TOXIC, OR WHICH OTHERWISE VIOLATE ANY STATE, FEDERAL, OR LOCAL LAW ORDINANCE, CODE, REGULATION, RULE, ORDER, OR STANDARD. ONLY EARTH MATERIAL SHALL BE PLACED IN FILLS.

WATER & SANITARY NOTE

NO KNOWN EXISTING WELLS OR SEPTIC SYSTEMS ARE LOCATED ON OR WITHIN 100 FT OF THE PROJECT AREA.

TRENCH NOTE

IF WORKERS ENTER ANY TRENCH OR OTHER EXCAVATION FOUR OR MORE FEET IN DEPTH THAT DOES NOT MEET THE OPEN PIT REQUIREMENTS OF WSDOT SECTION 2-09.3(3)B, IT SHALL BE SHORED AND CRIBBED. THE CONTRACTOR IS ALONE RESPONSIBLE FOR WORKER SAFETY. ALL TRENCH SAFETY SYSTEMS SHALL MEET THE REQUIREMENTS OF THE WASHINGTON INDUSTRIAL SAFETY AND HEALTH ACT, CHAPTER 49.17 RCW.

GRADING NOTES

THE CONTRACTOR SHALL NOTIFY THE ENGINEER IN THE EVENT OR DISCOVERY OF POOR SOILS, GROUNDWATER OR DISCREPANCIES IN THE EXISTING CONDITIONS AS NOTED ON THE PLANS.

1. MAXIMUM SLOPE STEEPNESS SHALL BE 2:1 (HORIZONTAL TO VERTICAL) FOR FILL SLOPES AND 2:1 FOR CUT SLOPES.
2. ALL AREAS RECEIVING FILL MATERIAL SHALL BE PREPARED BY REMOVING VEGETATION, NON-COMPLYING FILL, TOPSOIL AND OTHER UNSUITABLE MATERIAL, BY SCARIFYING THE SURFACE TO PROVIDE A BOND WITH THE NEW FILL, AND WHERE SLOPES ARE STEEPER THAN 3 HORIZONTAL TO 1 VERTICAL AND THE HEIGHT IS GREATER THAN 5 FT., BY BENCHING INTO SOUND COMPETENT MATERIAL AS DETERMINED BY A SOILS ENGINEER.

EARTHWORK QUANTITIES

TOTAL AREA DISTURBED = ±67,116 SF (1.54 ACRES)
TOTAL CUT = ±7,248 CY
TOTAL FILL = ±3,139 CY
NET = ±4,109 CY (CUT)

THIS CALCULATION IS FOR REVIEW AND PERMITTING PURPOSES ONLY. THE NUMBERS SHOWN ARE GENERATED FROM THE FINISHED GROUND SURFACE TO THE EXISTING GROUND PROVIDED BY THE SURVEY. CONTRACTOR SHALL DO THEIR OWN CALCULATION BASED ON THE INFORMATION PROVIDED WITHIN THESE PLANS.

THE QUANTITIES MAY VARY BASED ON THE FOLLOWING FACTORS:

1. SHRINK/SWELL OF EXISTING SOILS.
2. VARIANCES OF VEGETATION THICKNESS AND UNSUITABLE SOILS.
3. SUBBASE REQUIREMENTS FOR THE BUILDING FOUNDATION BASED ON FINAL STRUCTURAL DESIGN.
4. TRENCHING EXCAVATION FOR PROPOSED UTILITIES.

GENERAL NOTES

1. ALL WORKMANSHIP AND MATERIALS SHALL CONFORM TO THE MOST CURRENT STANDARD SPECIFICATIONS FOR ROAD, BRIDGE AND MUNICIPAL CONSTRUCTION PREPARED BY WSDOT AND APWA AS ADOPTED BY THE KITSAP COUNTY DEPARTMENT OF PUBLIC WORKS (KCPW).
2. ANY REVISIONS TO THE ACCEPTED CONSTRUCTION PLANS SHALL BE REVIEWED AND APPROVED BY THE COUNTY PRIOR TO IMPLEMENTATION IN THE FIELD.
3. THE CONTRACTOR SHALL MAINTAIN A SET OF THE ACCEPTED CONSTRUCTION DRAWINGS ON-SITE AT ALL TIMES WHILE CONSTRUCTION IS IN PROGRESS.
4. IT SHALL BE THE RESPONSIBILITY OF THE CONTRACTOR TO OBTAIN ALL NECESSARY PERMITS FROM THE KCPW PRIOR TO COMMENCING ANY WORK WITHIN COUNTY RIGHT-OF-WAY.
5. THE CONTRACTOR SHALL BE RESPONSIBLE FOR PROVIDING ADEQUATE TRAFFIC CONTROL AT ALL TIMES DURING CONSTRUCTION ALONGSIDE OR WITHIN ALL PUBLIC ROADWAYS. TRAFFIC FLOW ON EXISTING PUBLIC ROADWAYS SHALL BE MAINTAINED AT ALL TIMES, UNLESS PERMISSION IS OBTAINED FROM THE KCPW FOR ROAD CLOSURE AND/OR DETOURS.
6. THE LOCATION OF EXISTING UTILITIES ON THIS PLAN IS APPROXIMATE ONLY. THE CONTRACTOR SHALL CONTRACT THE "UNDERGROUND LOCATE" CENTER AT 811, AND NON-SUBSCRIBING INDIVIDUAL UTILITY COMPANIES 48 HOURS IN ADVANCE OF THE COMMENCEMENT OF ANY CONSTRUCTION ACTIVITY. THE CONTRACTOR SHALL PROVIDE FOR PROTECTION OF EXISTING UTILITIES FROM DAMAGE CAUSED BY THE CONTRACTOR'S OPERATIONS.
7. ROCKERIES OR OTHER RETAINING FACILITIES EXCEEDING 4 FT. IN HEIGHT REQUIRE A SEPARATE PERMIT
8. A "FORESTRY PRACTICES" PERMIT MAY BE REQUIRED PRIOR TO CLEARING OF THE SITE.

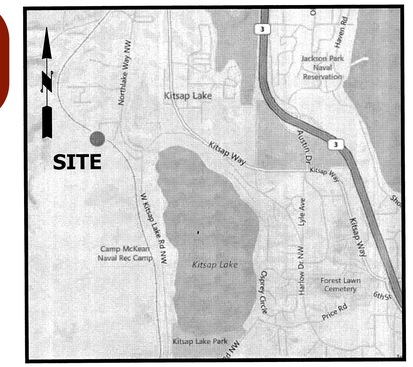

VICINITY MAP

NOT TO SCALE

PROJECT INFORMATION

PARCEL NUMBERS:	072401-4-132-2003, 072401-4-131-2004 & 072401-4-127-2000
JURISDICTION:	KITSAP COUNTY
ZONING:	RURAL WOODED (RW)
TOTAL SITE AREA:	±23.21 AC
TOTAL IMPERVIOUS:	24,905 SF (0.57 AC)
TOTAL DISTURBED:	70,548 SF (1.62 AC)

CIVIL ENGINEER/SURVEYOR

CONTOUR ENGINEERING LLC
4706 97TH STREET NW, BUILDING #2
P.O. BOX 949
GIG HARBOR, WA 98335
PHONE: (253) 857-5454

GEOTECHNICAL ENGINEER

GEORESOURCES, LLC
5007 PACIFIC HIGHWAY EAST, #16
FIFE, WA 98424

CLIENT

UELAND TREE FARM LLC
6323 PIONEER WAY EAST
PUYALLUP, WA 98371
(253) 307-5900

SHEET INDEX

TOPOGRAPHY NOTE

EXISTING TOPOGRAPHY & BOUNDARY INFORMATION DEPICTED ON PLANS WAS OBTAINED COURTESY OF KITSAP COUNTY GIS. CONTRACTOR SHALL REVIEW INFORMATION AND VERIFY ALL IS CONSISTENT WITH ACTUAL FIELD CONDITIONS PRIOR TO BEGINNING CONSTRUCTION OR LAND DISTURBING ACTIVITIES. IF ACTUAL FIELD CONDITIONS DO NOT MATCH WHAT IS SHOWN ON THE PLANS, CONTRACTOR SHALL CONTACT PROJECT ENGINEER IMMEDIATELY FOR POSSIBLE DESIGN CHANGES AND/OR ADJUSTMENTS.

VERIFICATION NOTE

ALL EXISTING UTILITIES IN THE CONSTRUCTION AREA SHALL BE IDENTIFIED AND VERIFIED FOR DEPTH AND LOCATION PRIOR TO ANY CONSTRUCTION ACTIVITIES SO TO IDENTIFY ANY POTENTIAL CONFLICTS WITH PROPOSED CONSTRUCTION. CONTACT PROJECT ENGINEER IMMEDIATELY IF ANY CONFLICTS ARE IDENTIFIED.

PRIOR TO ANY CONSTRUCTION ACTIVITIES, VERIFY EXISTING TOPOGRAPHY IS CONSISTENT WITH WHAT IS SHOWN ON PLANS AND IF THERE ARE ANY POTENTIAL CONFLICTS WITH PROPOSED CONSTRUCTION ACTIVITIES. CONTACT PROJECT ENGINEER IMMEDIATELY IF ANY CONFLICTS ARE IDENTIFIED.

CALL 811 AT LEAST 48 HOURS BEFORE YOU DIG

REVISION	DESCRIPTION	DATE	BY

CONTOUR ENGINEERING • LLC
CIVIL ENGINEERS ~ SURVEYORS ~ LAND PLANNERS
Phone: 253-857-5454 ~ Fax: 253-509-0044 ~ info@contourplic.com
Mailing Address: P.O. Box 949, Gig Harbor, WA 98335
Physical Address: 4706 97th Street NW, Suite 100, Gig Harbor, WA 98332

BRETT M. ALLEN — STATE OF WASHINGTON — 2/27/15 — REGISTERED PROFESSIONAL ENGINEER

SHEET TITLE: COVER SHEET

UTF MINERAL RESOURCE DEVELOPMENT (PHASE 1)

CLIENT: UELAND TREE FARM LLC, 6323 PIONEER WAY EAST, PUYALLUP, WA 98371

CONTACT: MARK MAUREN PHONE: (253) 307-5900

DESIGNER: K. MAUREN
ENGINEER: B. ALLEN
DRAWN: K. MAUREN
S7 T24N R01E WM
DATE: 2.27.15
REVISED:

PROJECT: 15-009
DWG NAME: 15-009C

SHEET	REV.
C1	0
1 OF 7	

UELAND TREE FARM MINERAL RESOURCE DEVELOPMENT (PHASE 1)

A PORTION OF THE SE 1/4 OF SECTION 7, TOWNSHIP 24 NORTH , RANGE 1 EAST, W.M.
KITSAP COUNTY, WASHINGTON
TESC PLAN

GRAPHIC SCALE
0 20 40
1 INCH = 20 FEET (22"x34")
1 INCH = 40 FEET (11"x17")

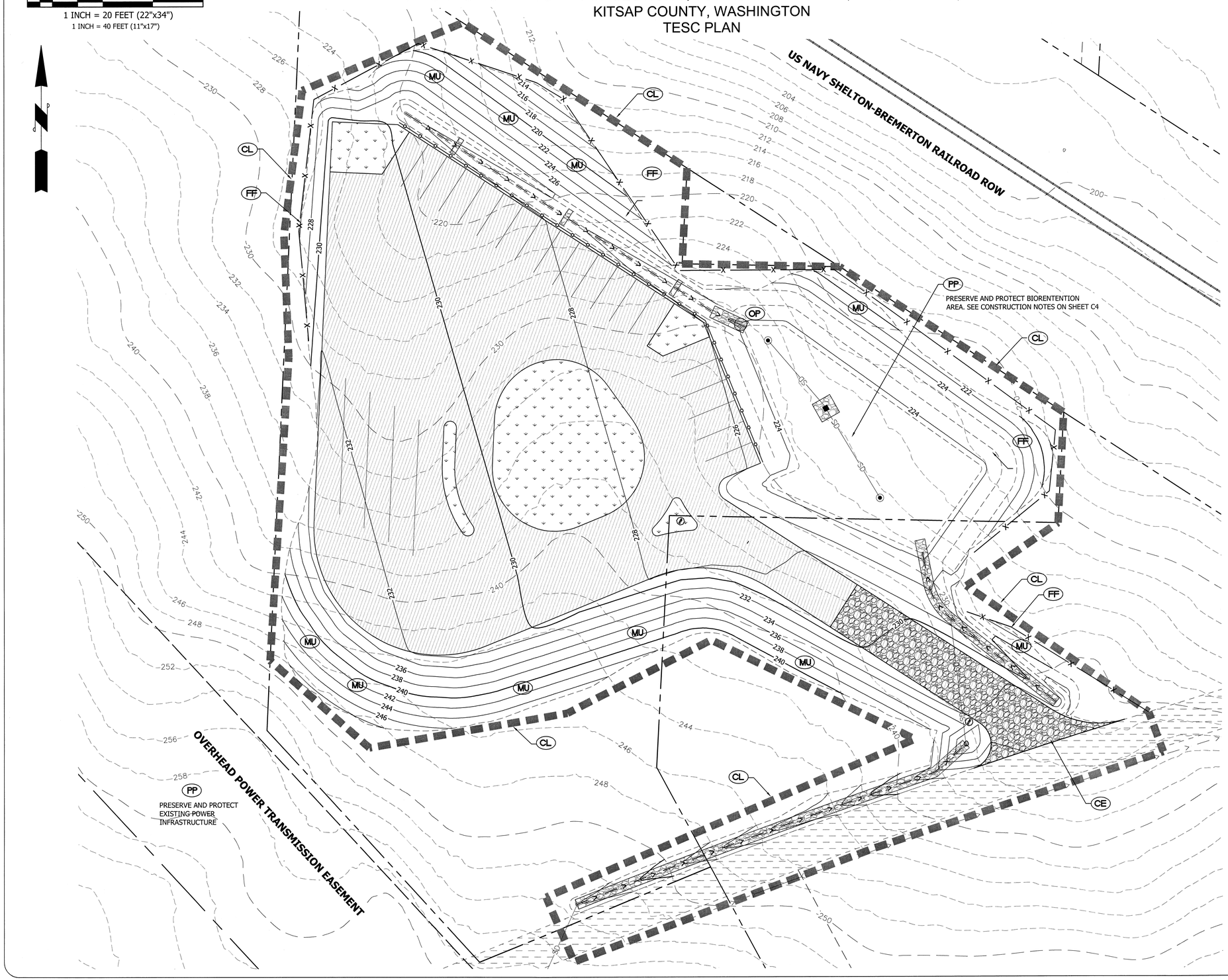

Draft

TESC LEGEND

CL	CLEARING/CONSTRUCTION LIMITS
OP	OUTLET/INLET PROTECTION
CE	TEMPORARY CONSTRUCTION ENTRANCE SEE DETAIL 1, SHEET C6
PP	PRESERVE AND PROTECT PER CALLOUTS
FF	FILTER FENCE SEE DETAIL 2, SHEET C6
MU	MULCH PER NOTE ON SHEET C6

TOPOGRAPHY NOTE

EXISTING TOPOGRAPHY & BOUNDARY INFORMATION DEPICTED ON PLANS WAS OBTAINED COURTESY OF KITSAP COUNTY GIS. CONTRACTOR SHALL REVIEW INFORMATION AND VERIFY ALL IS CONSISTENT WITH ACTUAL FIELD CONDITIONS PRIOR TO BEGINNING CONSTRUCTION OR LAND DISTURBING ACTIVITIES. IF ACTUAL FIELD CONDITIONS DO NOT MATCH WHAT IS SHOWN ON THE PLANS, CONTRACTOR SHALL CONTACT PROJECT ENGINEER IMMEDIATELY FOR POSSIBLE DESIGN CHANGES AND/OR ADJUSTMENTS.

VERIFICATION NOTE

ALL EXISTING UTILITIES IN THE CONSTRUCTION AREA SHALL BE IDENTIFIED AND VERIFIED FOR DEPTH AND LOCATION PRIOR TO ANY CONSTRUCTION ACTIVITIES SO TO IDENTIFY ANY POTENTIAL CONFLICTS WITH PROPOSED CONSTRUCTION. CONTACT PROJECT ENGINEER IMMEDIATELY IF ANY CONFLICTS ARE IDENTIFIED.

PRIOR TO ANY CONSTRUCTION ACTIVITIES, VERIFY EXISTING TOPOGRAPHY IS CONSISTENT WITH WHAT IS SHOWN ON PLANS AND IF THERE ARE ANY POTENTIAL CONFLICTS WITH PROPOSED CONSTRUCTION ACTIVITIES. CONTACT PROJECT ENGINEER IMMEDIATELY IF ANY CONFLICTS ARE IDENTIFIED.

CALL 811 AT LEAST 48 HOURS BEFORE YOU DIG

REVISION	DESCRIPTION	DATE	BY

CONTOUR ENGINEERING • L.L.C.
CIVIL ENGINEERS ~ SURVEYORS ~ LAND PLANNERS
Phone: 253-857-5454 ~ Fax: 253-509-0044 ~ info@contourplic.com
Mailing Address: P.O. Box 949, Gig Harbor, WA 98335
Physical Address: 4706 97th Street NW, Suite 100, Gig Harbor, WA 98332

BRETT M. ALLEN
STATE OF WASHINGTON
2/27/15
REGISTERED PROFESSIONAL ENGINEER

SHEET TITLE: TESC PLAN

UTF MINERAL RESOURCE DEVELOPMENT (PHASE 1)

CLIENT: UELAND TREE FARM LLC
6323 PIONEER WAY EAST
PUYALLUP, WA 98371

CONTACT: MARK MAUREN
PHONE: (253) 307-5900

DESIGNER: K. MAUREN
ENGINEER: B. ALLEN
DRAWN: K. MAUREN
S7 T24N R01E WM
DATE: 2.27.15
REVISED:

PROJECT: 15-009
DWG NAME: 15-009C

SHEET	REV.
C2	0
2 OF 7	

UELAND TREE FARM MINERAL RESOURCE DEVELOPMENT (PHASE 1)

A PORTION OF THE SE 1/4 OF SECTION 7, TOWNSHIP 24 NORTH , RANGE 1 EAST, W.M.
KITSAP COUNTY, WASHINGTON
SITE PLAN

GRAPHIC SCALE
0 20 40
1 INCH = 20 FEET (22"x34")
1 INCH = 40 FEET (11"x17")

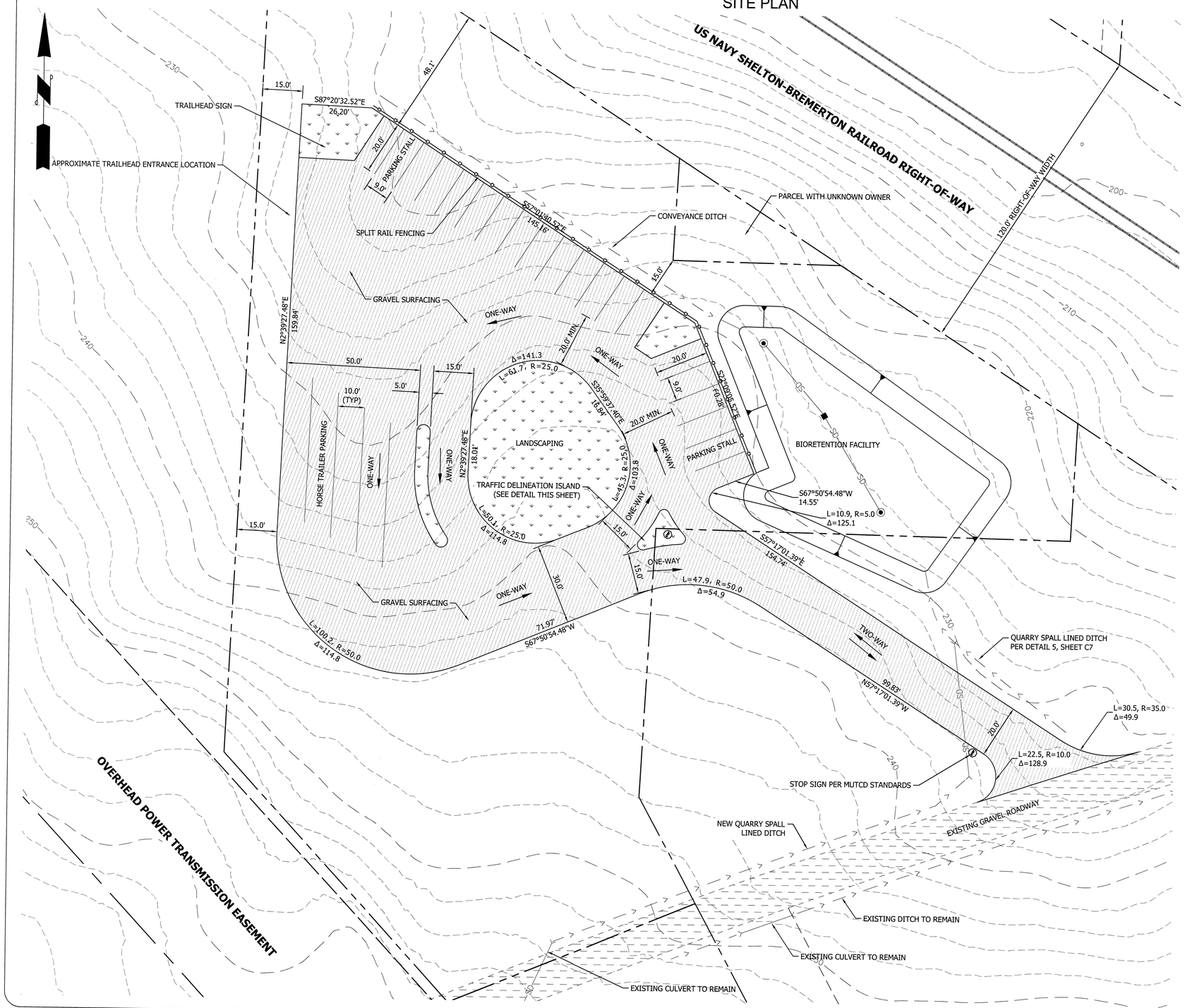

Draft

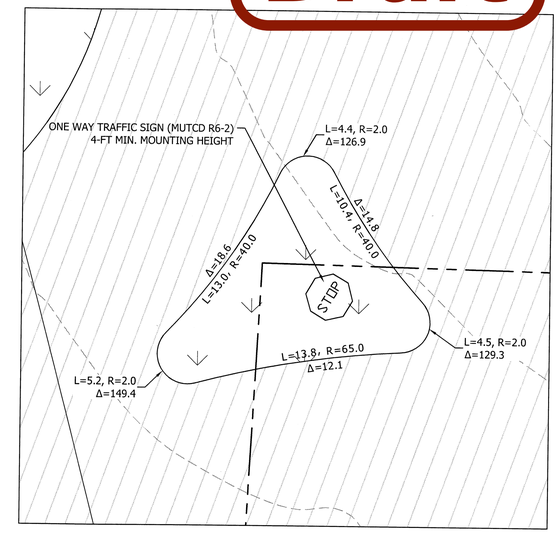

TRAFFIC DELINEATION ISLAND DETAIL
SCALE: 1"=5'

TOPOGRAPHY NOTE

EXISTING TOPOGRAPHY & BOUNDARY INFORMATION DEPICTED ON PLANS WAS OBTAINED COURTESY OF KITSAP COUNTY GIS. CONTRACTOR SHALL REVIEW INFORMATION AND VERIFY ALL IS CONSISTENT WITH ACTUAL FIELD CONDITIONS PRIOR TO BEGINNING CONSTRUCTION OR LAND DISTURBING ACTIVITIES. IF ACTUAL FIELD CONDITIONS DO NOT MATCH WHAT IS SHOWN ON THE PLANS, CONTRACTOR SHALL CONTACT PROJECT ENGINEER IMMEDIATELY FOR POSSIBLE DESIGN CHANGES AND/OR ADJUSTMENTS.

VERIFICATION NOTE

ALL EXISTING UTILITIES IN THE CONSTRUCTION AREA SHALL BE IDENTIFIED AND VERIFIED FOR DEPTH AND LOCATION PRIOR TO ANY CONSTRUCTION ACTIVITIES SO TO IDENTIFY ANY POTENTIAL CONFLICTS WITH PROPOSED CONSTRUCTION. CONTACT PROJECT ENGINEER IMMEDIATELY IF ANY CONFLICTS ARE IDENTIFIED.

PRIOR TO ANY CONSTRUCTION ACTIVITIES, VERIFY EXISTING TOPOGRAPHY IS CONSISTENT WITH WHAT IS SHOWN ON PLANS AND IF THERE ARE ANY POTENTIAL CONFLICTS WITH PROPOSED CONSTRUCTION ACTIVITIES. CONTACT PROJECT ENGINEER IMMEDIATELY IF ANY CONFLICTS ARE IDENTIFIED.

CALL 811 AT LEAST 48 HOURS BEFORE YOU DIG

REVISION	DESCRIPTION	DATE	BY

CONTOUR ENGINEERING • LLC
CIVIL ENGINEERS ~ SURVEYORS ~ LAND PLANNERS
Phone: 253-857-5454 ~ Fax: 253-509-0044 ~ info@contourllc.com
Mailing Address: P.O. Box 949, Gig Harbor, WA 98335
Physical Address: 4706 97th Street NW, Suite 100, Gig Harbor, WA 98332

BRETT M. ALLEN — STATE OF WASHINGTON — 38335 — REGISTERED PROFESSIONAL ENGINEER — 2/27/15

SHEET TITLE: SITE PLAN
UTF MINERAL RESOURCE DEVELOPMENT (PHASE 1)
CLIENT: UELAND TREE FARM LLC, 6323 PIONEER WAY EAST, PUYALLUP, WA 98371
CONTACT: MARK MAUREN
PHONE: (253) 307-5900

DESIGNER: K. MAUREN
ENGINEER: B. ALLEN
DRAWN: K. MAUREN
S7 T24N R01E WM
DATE: 2.27.15
REVISED:

PROJECT: 15-009
DWG NAME: 15-009C

SHEET	REV.
C3	0
3 OF 7	

UELAND TREE FARM MINERAL RESOURCE DEVELOPMENT (PHASE 1)

A PORTION OF THE SE 1/4 OF SECTION 7, TOWNSHIP 24 NORTH , RANGE 1 EAST, W.M.
KITSAP COUNTY, WASHINGTON
DRAINAGE PLAN

GRAPHIC SCALE
0 30 60
1 INCH = 30 FEET (22"x34")
1 INCH = 60 FEET (11"x17")

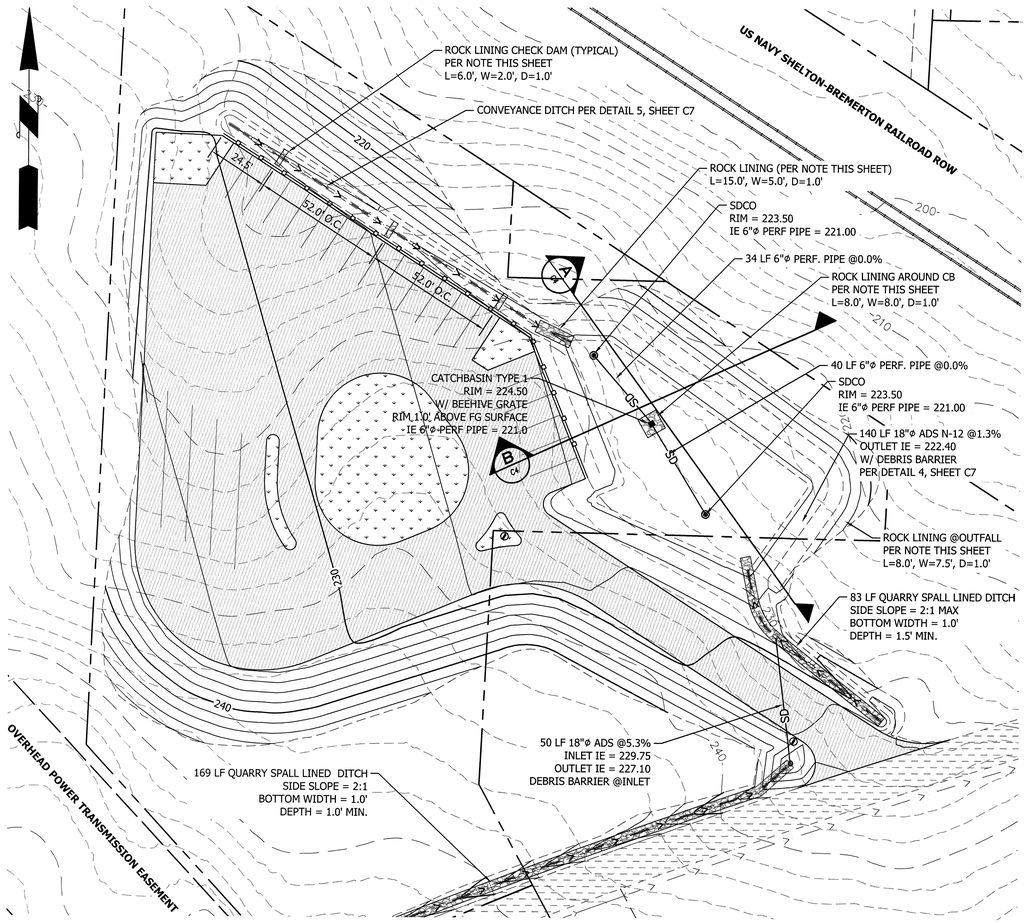

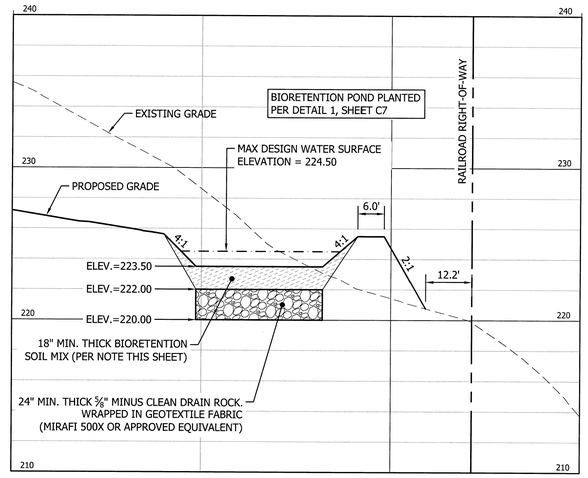

BIORETENTION CROSS-SECTION B
HORIZONTAL SCALE: 1"=20'
VERTICAL SCALE: 1"=5'

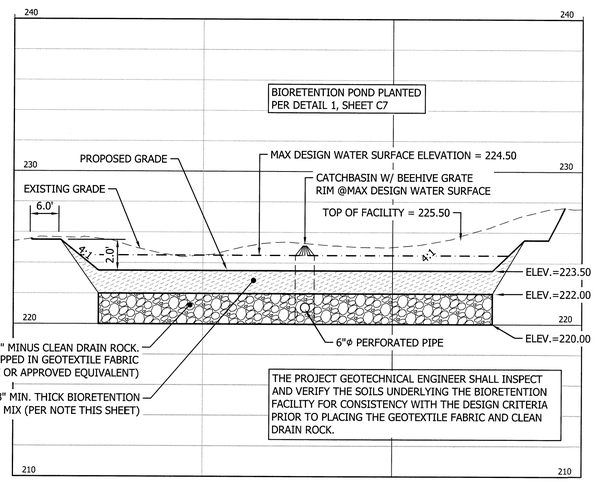

BIORETENTION CROSS-SECTION A
HORIZONTAL SCALE: 1"=20'
VERTICAL SCALE: 1"=5'

TOPOGRAPHY NOTE
EXISTING TOPOGRAPHY & BOUNDARY INFORMATION DEPICTED ON PLANS WAS OBTAINED COURTESY OF KITSAP COUNTY GIS. CONTRACTOR SHALL REVIEW INFORMATION AND VERIFY ALL IS CONSISTENT WITH ACTUAL FIELD CONDITIONS PRIOR TO BEGINNING CONSTRUCTION OR LAND DISTURBING ACTIVITIES. IF ACTUAL FIELD CONDITIONS DO NOT MATCH WHAT IS SHOWN ON THE PLANS, CONTRACTOR SHALL CONTACT PROJECT ENGINEER IMMEDIATELY FOR POSSIBLE DESIGN CHANGES AND/OR ADJUSTMENTS.

VERIFICATION NOTE
ALL EXISTING UTILITIES IN THE CONSTRUCTION AREA SHALL BE IDENTIFIED AND VERIFIED FOR DEPTH AND LOCATION PRIOR TO ANY CONSTRUCTION ACTIVITIES SO TO IDENTIFY ANY POTENTIAL CONFLICTS WITH PROPOSED CONSTRUCTION. CONTACT PROJECT ENGINEER IMMEDIATELY IF ANY CONFLICTS ARE IDENTIFIED.

PRIOR TO ANY CONSTRUCTION ACTIVITIES, VERIFY EXISTING TOPOGRAPHY IS CONSISTENT WITH WHAT IS SHOWN ON PLANS AND IF THERE ARE ANY POTENTIAL CONFLICTS WITH PROPOSED CONSTRUCTION ACTIVITIES. CONTACT PROJECT ENGINEER IMMEDIATELY IF ANY CONFLICTS ARE IDENTIFIED.

CALL 811 AT LEAST 48 HOURS BEFORE YOU DIG

QUARRY SPALL NOTE
QUARRY SPALLS UTILIZED FOR "***ROCK LINING***" AT THE OUTLET OF PIPES SHALL MEET THE FOLLOWING GRADATION:

- PASSING 8-INCH SQUARE SIEVE 100%
- PASSING 3-INCH SQUARE SIEVE 40-60% MAX
- PASSING 3/4-INCH SQUARE SIEVE 0-10% MAX

FLEXIBLE PIPE NOTES
1. PROVIDE UNIFORM SUPPORT UNDER BARRELS.
2. HAND TAMP UNDER HAUNCHES.
3. COMPACT BEDDING MATERIAL TO 95% MAX. DENSITY; DIRECTLY OVER PIPE, HAND TAMP ONLY.
4. SEE "EXCAVATION AND PREPARATION OF TRENCH" IN SANITARY SEWERS SECTION OF THE STANDARD WSDOT/APWA SPECIFICATIONS FOR TRENCH WIDTH "W" AND TRENCHING OPTIONS. THE PIPE ZONE WILL BE THE ACTUAL TRENCH WIDTH. THE MINIMUM CONCRETE WIDTH SHALL BE 1½ I.D. + 18".
5. TRENCH BACKFILL SHALL CONFORM TO "BACKFILLING SEWER TRENCHES" IN THE SANITARY SEWERS SECTION OF THE WSDOT/APWA STANDARD SPECIFICATIONS, EXCEPT THAT ROCKS OR LUMPS LARGER THAN 1" PER FOOT OF PIPE DIAMETER SHALL NOT BE USED IN THE BACKFILL MATERIAL.
6. SEE "BEDDING MATERIAL FOR FLEXIBLE PIPE" IN AGGREGATES SECTION OF THE WSDOT/APWA STANDARD SPECIFICATIONS FOR THE MATERIAL SPECIFICATIONS.

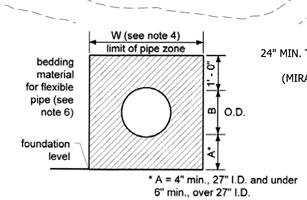

Bedding for Flexible Pipe

Backfill material placed in 0.5' loose layers and compacted to 95% maximum density.
Method B or C compaction (WSDOT/APWA) standard specifications.)

Pipe	Size	Min. dist. between barrels
circular pipe conc., LCPE, CMP (diameter)	12" to 24"	12"
	30" to 96"	diam. / 2
	102" to 180"	48"
pipe - arch metal only (span)	18" to 36"	12"
	43" to 142"	span / 3
	148" to 199"	48"

1 PIPE COMPACTION DETAIL
NOT TO SCALE KCSWDM FIGURE 4.2

BIORETENTION CONSTRUCTION NOTE
1. DO NOT INSTALL OR EXCAVATE DURING SOIL SATURATION PERIODS;
2. EXPOSED SIDES SHOULD BE NO STEEPER THAN 3H:1V; (4:1 DESIGN)
3. EXCAVATION AND SOIL PLACEMENT SHOULD BE DONE FROM BACKHOE OPERATING ADJACENT TO FACILITY – NO HEAVY EQUIPMENT IN THE FACILITY IF POSSIBLE;
4. IF EQUIPMENT MUST BE OPERATED WITHIN THE FACILITY, USE LIGHT WEIGHT, LOW GROUND PRESSURE EQUIPMENT AND RIP THE BASE TO REDUCE COMPACTION UPON COMPLETION;
5. DO NOT USE FULLY EXCAVATED BIORETENTION AS EROSION AND SEDIMENTATION CONTROL DURING CONSTRUCTION;
   5.1. CONSIDER PARTIAL EXCAVATION OF BIORETENTION CELLS PRIOR TO CONSTRUCTION (TO WITHIN 12" ABOVE FINISHED BOTTOM GRADE) FOR USE AS TEMPORARY STORMWATER DETENTION. CLOGGED SOIL AND SILT IS REMOVED DURING EXCAVATION TO FINISHED BOTTOM GRADE PRIOR TO INSTALLING BIORETENTION CELL PROFILE;
6. RIP SIDES AND BOTTOM TO ROUGHEN WHERE SEALED FROM EQUIPMENT;
7. DO NOT CONSTRUCT UNTIL ALL CONTRIBUTORY AREAS ARE STABILIZED FROM EROSION;
8. IF SEDIMENTATION OCCURS; BIORETENTION AREA MUST BE EXCAVATED TO REMOVE SEDIMENT.

BIORETENTION SOIL MIX
BIORETENTION SOIL SHALL BE A WELL BLENDED MIXTURE OF MINERAL AGGREGATE AND COMPOSTED MATERIAL MEASURED ON A VOLUME BASIS. BIORETENTION SOIL SHALL CONSIST OF TWO PARTS FINE COMPOST (APPROXIMATELY 35 TO 40 PERCENT) BY VOLUME AND THREE PARTS MINERAL AGGREGATE (APPROXIMATELY 60 TO 65 PERCENT), BY VOLUME. THE MIXTURE SHALL BE WELL BLENDED TO PROVIDE A HOMOGENEOUS MIX. ORGANIC MATTER CONTENT SHALL BE 4 TO 6 PERCENT.

Draft

MINERAL AGGREGATE
MINERAL AGGREGATE SHALL BE FREE OF WOOD, WASTE, COATING, OR ANY OTHER DELETERIOUS MATERIAL. ALL MINERAL AGGREGATE PASSING THE NO. 200 SIEVE SHALL BE NON-PLASTIC. AGGREGATE SHALL BE ANALYZED BY AN ACCREDITED LAB USING THE SIEVE SIZES AND GRADATION NOTED BELOW.

SIEVE SIZE	PERCENT PASSING
1-INCH	100
#4	60-100
#10	40-100
#40	15-50
#200	2-5

EFFORTS SHOULD BE MADE TO HAVE THE MINERAL AGGREGATE FOR BIORETENTION SOILS MEET THE FOLLOWING GRADATION COEFFICIENTS OF UNIFORMITY ($C_u = D_{60}/D_{10}$) EQUAL TO OR GREATER THAN 6; AND COEFFICIENT OF CURVE ($C_c = D_{30}^2/D_{60}D_{10}$) GREATER THAN OR EQUAL TO 1 AND LESS THAN OR EQUAL TO 3.

FINE COMPOSTED MATERIAL
COMPOST PRODUCTS SHALL BE THE RESULT OF THE BIOLOGICAL DEGRADATION AND TRANSFORMATION OF TYPE I OF III FEEDSTOCKS AS SPECIFIED BELOW, UNDER CONTROLLED CONDITIONS DESIGNED TO PROMOTE AEROBIC DECOMPOSITION, PER WAC 173-350-220, WHICH IS AVAILABLE AT *HTTP://WWW.ECY.WA.GOV/PROGRAMS/SWFA/COMPOST*. COMPOST SHALL BE STABLE WITH REGARD TO OXYGEN CONSUMPTION AND CARBON DIOXIDE GENERATION. COMPOST SHALL BE MATURE WITH REGARD TO ITS SUITABILITY FOR SERVING AS SOIL AMENDMENT AS DEFINED BELOW. THE COMPOST SHALL HAVE A MOISTURE CONTENT THAT HAS NO VISIBLE FREE WATER OR DUST PRODUCED WHEN HANDLING THE MATERIAL.

COMPOST PRODUCTION AND QUALITY SHALL COMPLY WITH CHAPTER 173-350 WAC, AND MEET THE FOLLOWING PHYSICAL CRITERIA:
1. COMPOST MATERIAL SHALL BE TESTED IN ACCORDANCE WITH THE U.S. COMPOSTING COUNCIL "TESTING METHODS FOR THE EXAMINATION OF COMPOST AND COMPOSTING" (TMECC) TEST METHOD 02.02-B, "SAMPLE SIEVING FOR AGGREGATE SIZE CLASSIFICATION", TO MEET THE SIZE GRADATTIONS ESTABLISHED IN THE U.S. COMPOSTING COUNCIL'S "SEAL OF TESTING ASSURANCE" (STA) PROGRAM, AS FOLLOWS:

PERCENT PASSING	MIN.	MAX.
2-INCH	100%	
1-INCH	99%	100%
⅜-INCH	90%	100%
¼-INCH	75%	100%

2. THE pH SHALL BE BETWEEN 5.5 AND 8.0 WHEN TESTED IN ACCORDANCE WITH TMECC 04.11-A, "1:5 SLURRY pH".
3. MANUFACTURED INERT MATERIAL (PLASTIC, CONCRETE, CERAMICS, METAL, ETC.) SHALL BE LESS THAN 1.0 PERCENT BY WEIGHT AS DETERMINED BT TMECC 03.08-A "PERCENT DRY WEIGHT BASIS".
4. MINIMUM ORGANIC MATTER CONTENT SHALL BE BETWEEN 45 AND 65 PERCENT BY DRY WEIGHT BASIS AS DETERMINED BY TMECC 05.07A, "LOSS-ON-IGNITION ORGANIC MATTER METHOD".
5. SOLUBLE SALT CONTENTS SHALL BE LESS THAN 6.0 MMHOS/CM TESTED IN ACCORDANCE WITH TMECC 04.10-A, "1:5 SLURRY METHOD, MASS BASIS".
6. MATURITY SHALL BE GREATER THAN 80% IN ACCORDANCE WITH TMECC 05.05A, "GERMINATION AND VIGOR".
7. STABILITY SHALL BE 7 OR BELOW IN ACCORDANCE WITH TMECC 05.08-B, "CARBON DIOXIDE EVOLUTION RATE".
8. THE COMPOST PRODUCT MUST ORIGINATE A MINIMUM OF 65 PERCENT BY VOLUME FROM RECYCLED PLANT WASTE AS DEFINED IN WAC 173-350-100 AS "TYPE I FEEDSTOCKS." A MAXIMUM OF 35 PERCENT BY VOLUME OF OTHER APPROVED ORGANIC WASTE AS DEFINED IN WAC 173-350-100 AS "TYPE III", INCLUDING POST-CONSUMER FOOD WASTE, BUT NOT INCLUDING BIOSOLIDS, MAY BE SUBSTITUTED FOR RECYCLED PLANT WASTE. THE ENGINEER MAY APPROVE COMPOST PRODUCTS CONTAINING UP TO 35% BIOSOLIDS OR MANURE FEEDSTOCKS FOR SPECIFIC PROJECTS OR SOIL BLENDS, BUT THESE FEEDSTOCKS ARE NOT ALLOWED UNLESS SPECIFIED, AND NOT ALLOWED IN COMPOST USED FOR BIORETENTION SOILS. THE SUPPLIER SHALL PROVIDE WRITTEN VERIFICATION OF FEEDSTOCK SOURCES.
9. FINE COMPOST SHALL HAVE A CARBON TO NITROGEN RATIO OF LESS THAN 25:1 AS DETERMINED USING TMECC 04.01 "TOTAL CARBON" AND TMECC 04.02D "TOTAL KJELDHAL NITROGEN". THE ENGINEER MAY SPECIFY A C:N RATIO UP TO 35:1 FOR PROJECTS WHERE THE PLANTS SELECTED ARE ENTIRELY PUGET SOUND NATIVE SPECIES.
10. THE ENGINEER MAY ALSO EVALUATE COMPOST FOR MATURITY USING THE SOLVITA COMPOST MATURITY TEST AT TIME OF DELIVERY. FINE COMPOST SHALL SCORE A NUMBER 6 OR ABOVE ON THE SOLVITA COMPOST MATURITY TEST.

THE COMPOST SUPPLIER SHALL TEST ALL COMPOST PRODUCTS WITHIN 90 CALENDAR DAYS PRIOR TO APPLICATION. SAMPLES SHALL BE COLLECTED USING THE SEAL OF TESTING ASSURANCE (STA) SAMPLE COLLECTION PROTOCOL. THE SAMPLE COLLECTION PROTOCOL CAN BE OBTAINED FROM THE U.S. COMPOSTING COUNCIL, 4250 VETERANS MEMORIAL HIGHWAY, SUITE 275, HOLBROOK, NY 11741 PHONE: 631-737-4931, WWW.COMPOSTINGCOUNCIL.ORG. THE SAMPLE SHALL BE SENT TO AN INDEPENDENT STA PROGRAM APPROVED LABORATORY. THE COMPOST SUPPLIER SHALL PAY FOR THE TEST. A COPY OF THE APPROVED INDEPENDENT STA PROGRAM LABORATORY TEST REPORT SHALL BE SUBMITTED TO THE ENGINEER PRIOR TO INITIAL APPLICATION OF THE COMPOST. SEVEN DAYS PRIOR TO APPLICATION, THE CONTRACTOR SHALL SUBMIT A SAMPLE OF EACH TYPE OF COMPOST TO BE USED ON THE PROJECT TO THE ENGINEER. COMPOST NOT CONFORMING TO THE ABOVE REQUIREMENTS OR TAKEN FROM A SOURCE OTHER THAN THOSE TESTED AND ACCEPTED SHALL BE IMMEDIATELY REMOVED FROM THE PROJECT AND REPLACED AT NO COST TO THE OWNER.

THE CONTRACTOR SHALL SUBMIT THE FOLLOWING INFORMATION TO THE ENGINEER FOR APPROVAL:
1. A COPY OF THE SOLID WASTE HANDLING PERMIT ISSUED TO THE SUPPLIER BY THE JURISDICTIONAL HEALTH DEPARTMENT AS PER WAC 173-350 (MINIMUM FUNCTIONAL STANDARDS FOR SOLID WASTE HANDLING).
2. THE SUPPLIER SHALL VERIFY IN WRITING, AND PROVIDE LAB ANALYSES THAT THE MATERIALS COMPLY WITH THE PROCESSES, TESTING, AND STANDARDS SPECIFIED IN WAC 173-350 AND THESE SPECIFICATIONS. AN INDEPENDENT STA PROGRAM CERTIFIED LABORATORY SHALL PERFORM THE ANALYSIS.
3. A LIST OF THE FEEDSTOCK BY PERCENTAGE PRESENT IN THE FINAL COMPOST PRODUCT.
4. A COPY OF THE PRODUCER'S STA CERTIFICATION AS ISSUED BY THE U.S. COMPOSTING COUNCIL.

ACCEPTANCE SHALL BE BASED UPON A SATISFACTORY TEST REPORT FROM AN INDEPENDENT STA PROGRAM CERTIFIED LABORATORY AND THE SAMPLE(S) SUBMITTED TO THE ENGINEER.

REVISION	DESCRIPTION	DATE	BY

CONTOUR ENGINEERING • LLC
CIVIL ENGINEERS ~ SURVEYORS ~ LAND PLANNERS
Phone: 253-857-5454 ~ Fax: 253-509-0044 ~ info@contourllc.com
Mailing Address: P.O. Box 949, Gig Harbor, WA 98335
Physical Address: 4706 97th Street NW, Suite 100, Gig Harbor, WA 98332

BRETT M. ALLEN — STATE OF WASHINGTON — 37830 — REGISTERED PROFESSIONAL ENGINEER — 2/27/15

SHEET TITLE: DRAINAGE PLAN
UTF MINERAL RESOURCE DEVELOPMENT (PHASE 1)
CLIENT: UELAND TREE FARM LLC, 6323 PIONEER WAY EAST, PUYALLUP, WA 98371
CONTACT: MARK MAUREN PHONE: (253) 307-5900

DESIGNER: K. MAUREN
ENGINEER: B. ALLEN
DRAWN: K. MAUREN
S7 T24N R01E WM
DATE: 2.27.15
REVISED:
PROJECT: 15-009
DWG NAME: 15-009C

SHEET C4 — 4 OF 7 — REV. 0

UELAND TREE FARM MINERAL RESOURCE DEVELOPMENT (PHASE 1)

A PORTION OF THE SE 1/4 OF SECTION 7, TOWNSHIP 24 NORTH , RANGE 1 EAST, W.M.
KITSAP COUNTY, WASHINGTON
GRADING PLAN

GRAPHIC SCALE
0 20 40
1 INCH = 20 FEET (22"x34")
1 INCH = 40 FEET (11"x17")

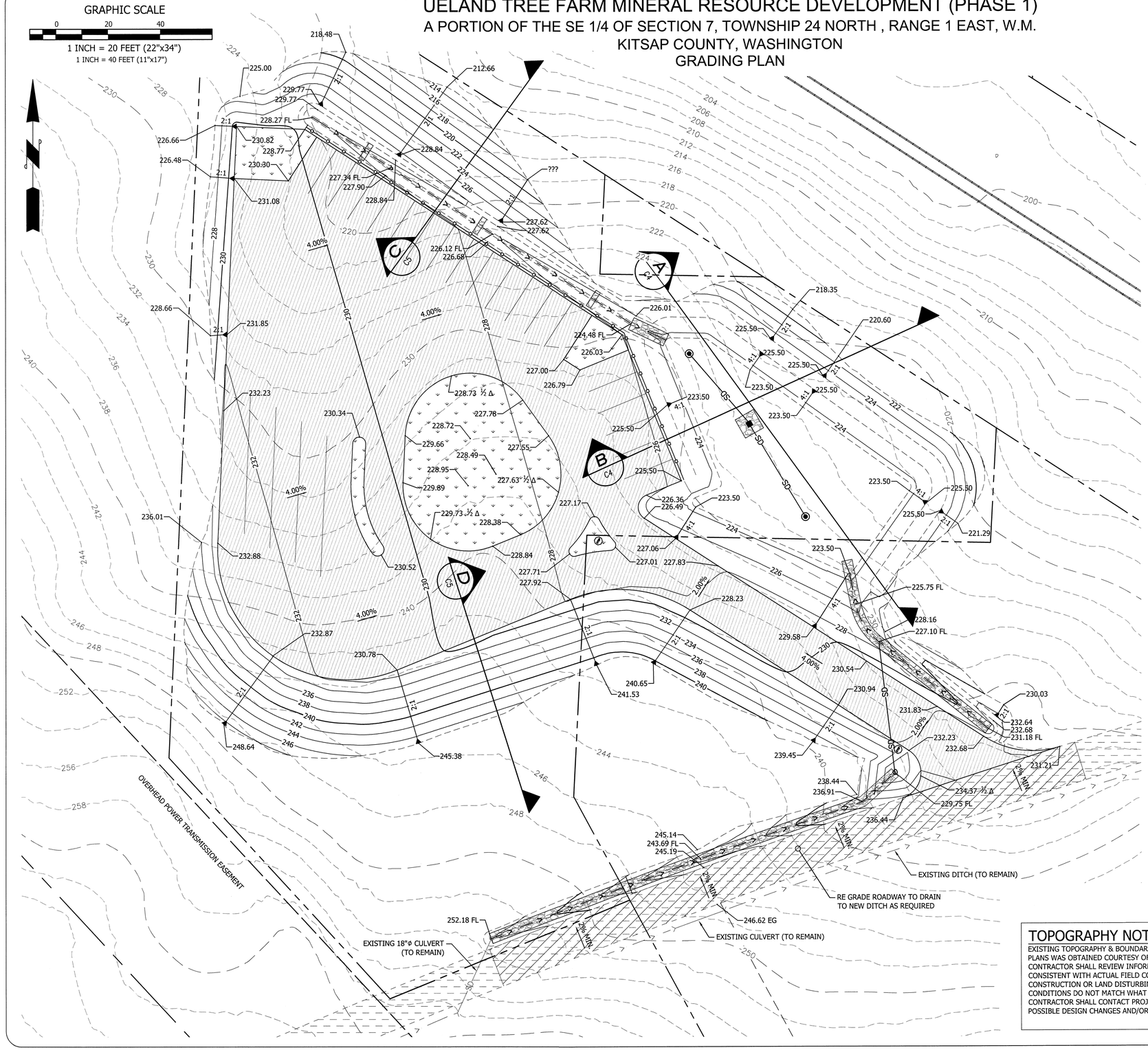

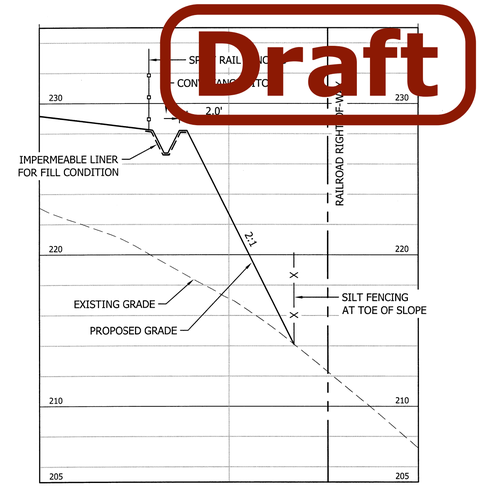

SITE CROSS-SECTION C
HORIZONTAL SCALE: 1"=20'
VERTICAL SCALE: 1"=5'

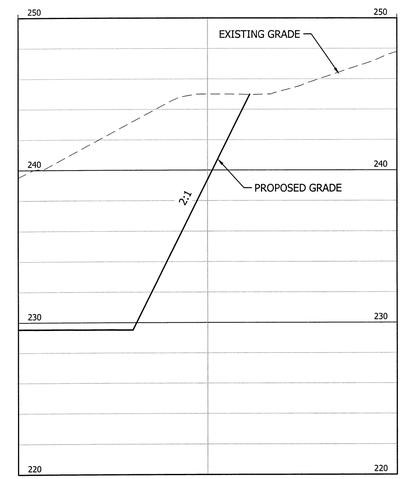

SITE CROSS-SECTION D
HORIZONTAL SCALE: 1"=20'
VERTICAL SCALE: 1"=5'

TOPOGRAPHY NOTE

EXISTING TOPOGRAPHY & BOUNDARY INFORMATION DEPICTED ON PLANS WAS OBTAINED COURTESY OF KITSAP COUNTY GIS. CONTRACTOR SHALL REVIEW INFORMATION AND VERIFY ALL IS CONSISTENT WITH ACTUAL FIELD CONDITIONS PRIOR TO BEGINNING CONSTRUCTION OR LAND DISTURBING ACTIVITIES. IF ACTUAL FIELD CONDITIONS DO NOT MATCH WHAT IS SHOWN ON THE PLANS, CONTRACTOR SHALL CONTACT PROJECT ENGINEER IMMEDIATELY FOR POSSIBLE DESIGN CHANGES AND/OR ADJUSTMENTS.

VERIFICATION NOTE

ALL EXISTING UTILITIES IN THE CONSTRUCTION AREA SHALL BE IDENTIFIED AND VERIFIED FOR DEPTH AND LOCATION PRIOR TO ANY CONSTRUCTION ACTIVITIES SO TO IDENTIFY ANY POTENTIAL CONFLICTS WITH PROPOSED CONSTRUCTION. CONTACT PROJECT ENGINEER IMMEDIATELY IF ANY CONFLICTS ARE IDENTIFIED.

PRIOR TO ANY CONSTRUCTION ACTIVITIES, VERIFY EXISTING TOPOGRAPHY IS CONSISTENT WITH WHAT IS SHOWN ON PLANS AND IF THERE ARE ANY POTENTIAL CONFLICTS WITH PROPOSED CONSTRUCTION ACTIVITIES. CONTACT PROJECT ENGINEER IMMEDIATELY IF ANY CONFLICTS ARE IDENTIFIED.

CALL 811 AT LEAST 48 HOURS BEFORE YOU DIG

REVISION	DESCRIPTION	DATE	BY

CONTOUR ENGINEERING • LLC
CIVIL ENGINEERS ~ SURVEYORS ~ LAND PLANNERS
Phone: 253-857-5454 ~ Fax: 253-509-0044 ~ info@contourpllc.com
Mailing Address: P.O. Box 949, Gig Harbor, WA 98335
Physical Address: 4706 97th Street NW, Suite 100, Gig Harbor, WA 98332

BRETT M. ALLEN, STATE OF WASHINGTON, 37830, REGISTERED PROFESSIONAL ENGINEER

SHEET TITLE: GRADING PLAN

UTF MINERAL RESOURCE DEVELOPMENT (PHASE 1)

CLIENT: UELAND TREE FARM LLC
6323 PIONEER WAY EAST
PUYALLUP, WA 98371

CONTACT: MARK MAUREN
PHONE: (253) 307-5900

DESIGNER: K. MAUREN
ENGINEER: B. ALLEN
DRAWN: K. MAUREN
S7 T24N R01E WM
DATE: 2.27.15
REVISED:

PROJECT: 15-009
DWG NAME: 15-009C

SHEET	REV.
C5	0
5 OF 7	

UELAND TREE FARM MINERAL RESOURCE DEVELOPMENT (PHASE 1)

A PORTION OF THE SE 1/4 OF SECTION 7, TOWNSHIP 24 NORTH , RANGE 1 EAST, W.M.
KITSAP COUNTY, WASHINGTON
NOTES AND DETAILS

Draft

MINIMUM EROSION AND SEDIMENTATION CONTROL REQUIREMENTS

1. STABILIZATION AND SEDIMENT TRAPPING. ALL EXPOSED AND UNWORKED SOILS, INCLUDING SOIL STOCKPILES, SHALL BE STABILIZED BY SUITABLE APPLICATION OF BMPS THAT PROTECT SOIL FROM THE EROSIVE FORCES OF RAINDROP IMPACT AND FLOWING WATER. APPLICABLE PRACTICES INCLUDE, BUT ARE NOT LIMITED TO VEGETATIVE ESTABLISHMENT, MULCHING, PLASTIC COVERING, AND THE EARLY APPLICATION OF GRAVEL BASE ON AREAS TO BE PAVED. FROM OCTOBER 1 TO APRIL 30, NO SOILS SHALL REMAIN UNSTABILIZED FOR MORE THAN 2 DAYS. FROM MAY 1 TO SEPTEMBER 30, NO SOILS SHALL REMAIN UNSTABILIZED FOR MORE THAN 7 DAYS.
2. AT ALL TIMES OF THE YEAR, THE CONTRACTOR SHALL HAVE SUFFICIENT MATERIALS, EQUIPMENT AND LABOR ON-SITE TO STABILIZE AND PREVENT EROSION FROM ALL DENUDED AREAS WITHIN 12-HOURS AS SITE AND WEATHER CONDITIONS DICTATE.
3. FROM OCTOBER 1ST TO APRIL 30TH, THE PROJECT ENGINEER SHALL VISIT THE DEVELOPMENT SITE A MINIMUM OF ONCE PER WEEK FOR THE PURPOSE OF INSPECTING THE EROSION AND SEDIMENTATION CONTROL FACILITIES, REVIEWING THE PROGRESS OF CONSTRUCTION, AND VERIFYING THE EFFECTIVENESS OF THE EROSION CONTROL MEASURES BEING UNDERTAKEN. THE PROJECT ENGINEER SHALL IMMEDIATELY INFORM THE COUNTY OF ANY PROBLEMS OR POTENTIAL PROBLEMS OBSERVED DURING SAID SITE VISITS, AS WELL AS OF ANY RECOMMENDED CHANGES IN THE EROSION CONTROL MEASURES TO BE UNDERTAKEN. WHEN REQUESTED BY THE COUNTY, THE PROJECT ENGINEER SHALL PROVIDE THE COUNTY WITH WRITTEN RECORDS OF SAID WEEKLY SITE VISITS, INCLUDING DATES OF VISITS AND NOTED SITE OBSERVATIONS.
4. IN THE EVENT THAT GROUND ON A PROJECT SITE IS LEFT BARE AFTER SEPTEMBER 30TH, THE COUNTY MAY ISSUE A STOP WORK ORDER FOR THE ENTIRE PROJECT UNTIL SATISFACTORY CONTROLS ARE PROVIDED. IN ADDITION, THE OWNER WILL BE SUBJECT TO THE PENALTIES PROVIDED IN SECTION 12.32 OF THE KITSAP COUNTY CODE.
5. IN THE EVENT THAT GROUND ON A PROJECT SITE IS LEFT BARE AFTER SEPTEMBER 30TH, AND THE COUNTY IS UNSUCCESSFUL IN CONTACTING THE OWNER OR HIS/HER DESIGNATED EMERGENCY CONTACT PERSON, THE COUNTY MAY ENTER THE PROJECT SITE AND INSTALL TEMPORARY GROUND COVER MEASURES AND BILL THE OWNER FOR ALL EXPENSES INCURRED BY THE COUNTY. THESE COSTS WILL BE IN ADDITION TO ANY MONETARY PENALTIES LEVIED AGAINST THE OWNER.
6. DELINEATION OF CLEARING AND EASEMENT LIMITS. CLEARING LIMITS, SETBACKS, BUFFERS, AND SENSITIVE OR CRITICAL AREAS SUCH AS STEEP SLOPES, WETLANDS AND RIPARIAN CORRIDORS SHALL BE CLEARLY MARKED IN THE FIELD AND INSPECTED BY KITSAP COUNTY DEPARTMENT OF COMMUNITY DEVELOPMENT PRIOR TO COMMENCEMENT OF LAND CLEARING ACTIVITIES. DURING THE CONSTRUCTION PERIOD, NO DISTURBANCE BEYOND THE FLAGGED CLEARING LIMITS SHALL BE PERMITTED. THE FLAGGING SHALL BE MAINTAINED BY THE APPLICANT/CONTRACTOR FOR THE DURATION OF CONSTRUCTION.
7. PROTECTION OF ADJACENT PROPERTIES. ADJACENT PROPERTIES SHALL BE PROTECTED FROM SEDIMENT DEPOSITION BY APPROPRIATE USE OF VEGETATIVE BUFFER STRIPS, SEDIMENT BARRIERS OR FILTERS, DIKES OR MULCHING, OR BY A COMBINATION OF THESE MEASURES AND OTHER APPROPRIATE BMPS.
8. TIMING AND STABILIZATION OF SEDIMENT TRAPPING MEASURES. SEDIMENT PONDS AND TRAPS, PERIMETER DIKES, SEDIMENT BARRIERS AND OTHER BMPS INTENDED TO TRAP SEDIMENT ON-SITE SHALL BE CONSTRUCTED AS A FIRST STEP IN GRADING. THESE BMPS SHALL BE FUNCTIONAL BEFORE LAND DISTURBING ACTIVITIES TAKE PLACE. EARTHEN STRUCTURES SUCH AS DAMS, DIKES, AND DIVERSIONS SHALL BE STABILIZED ACCORDING TO THE TIMING INDICATED IN ITEM (1) ABOVE.
9. SLOPE STABILIZATION. CUT AND FILL SLOPES SHALL BE CONSTRUCTED IN A MANNER THAT WILL MINIMIZE EROSION. ROUGHENED SOIL SURFACES ARE PREFERRED TO SMOOTH SURFACES. INTERCEPTORS SHOULD BE CONSTRUCTED AT THE TOP OF LONG, STEEP SLOPES WHICH HAVE SIGNIFICANT AREAS ABOVE THAT CONTRIBUTE RUNOFF. CONCENTRATED RUNOFF SHOULD NOT BE ALLOWED TO FLOW DOWN THE FACE OF A CUT OR FILL SLOPE UNLESS CONTAINED WITHIN AN ADEQUATE CHANNEL OR PIPE SLOPE DRAIN. WHEREVER A SLOPE FACE CROSSES A WATER SEEPAGE PLANE, ADEQUATE DRAINAGE OR OTHER PROTECTION SHOULD BE PROVIDED. IN
10. ADDITION, SLOPES SHOULD BE STABILIZED IN ACCORDANCE WITH ITEM (1) ABOVE. CONTROLLING OFF-SITE EROSION. PROPERTIES AND WATERWAYS DOWNSTREAM FROM DEVELOPMENT SITES SHALL BE PROTECTED FROM EROSION DUE TO INCREASES IN THE VOLUME, VELOCITY, AND PEAK FLOW RATE OF STORMWATER RUNOFF FROM THE DEVELOPMENT SITE BY THE IMPLEMENTATION OF APPROPRIATE BMPS TO MINIMIZE ADVERSE DOWNSTREAM IMPACTS.
11. STABILIZATION OF TEMPORARY CONVEYANCE CHANNELS AND OUTLETS. ALL TEMPORARY ON-SITE CONVEYANCE CHANNELS SHALL BE DESIGNED, CONSTRUCTED AND STABILIZED TO PREVENT EROSION FROM THE EXPECTED FLOW VELOCITY FROM A 2-YEAR FREQUENCY, 24-HOUR DURATION STORM FOR THE POSTDEVELOPMENT CONDITION. STABILIZATION ADEQUATE TO PREVENT EROSION OF OUTLETS, ADJACENT STREAMBANKS, SLOPES AND DOWNSTREAM REACHES SHALL BE PROVIDED AT THE OUTLETS OF ALL CONVEYANCE SYSTEMS.
12. STORM DRAIN INLET PROTECTION. ALL STORM DRAIN INLETS MADE OPERABLE DURING CONSTRUCTION SHALL BE PROTECTED SO THAT STORMWATER RUNOFF SHALL NOT ENTER THE CONVEYANCE SYSTEM WITHOUT FIRST BEING FILTERED OR OTHERWISE TREATED TO REMOVE SEDIMENT. AFTER PROPER WRITTEN APPLICATION, THE REQUIREMENT FOR INLET PROTECTION MAY BE WAIVED BY THE COUNTY ON A SITE-SPECIFIC BASIS WHEN THE CONVEYANCE SYSTEM DOWNSTREAM OF THE INLET DISCHARGES TO AN APPROPRIATE SEDIMENT CONTAINMENT BMP AND THE CONVEYANCE SYSTEM CAN BE ADEQUATELY CLEANED FOLLOWING SITE STABILIZATION.
13. UNDERGROUND UTILITY CONSTRUCTION. THE CONSTRUCTION OF UNDERGROUND UTILITY LINES SHALL BE LIMITED, WHERE FEASIBLE, TO NO MORE THAN 500 FEET OF OPEN TRENCH AT ANY ONE TIME. WHERE CONSISTENT WITH SAFETY AND SPACE CONSIDERATIONS, EXCAVATED MATERIAL SHALL BE PLACED ON THE UPHILL SIDE OF THE TRENCH. DEWATERING DEVICES SHALL DISCHARGE TO AN APPROPRIATE SEDIMENT TRAP OR POND, PRECEDED BY ADEQUATE ENERGY DISSIPATION, PRIOR TO RUNOFF LEAVING THE SITE.
14. CONSTRUCTED ACCESS ROUTES. WHEREVER CONSTRUCTION VEHICLE ACCESS ROUTES INTERSECT PAVED ROADS, PROVISIONS MUST BE MADE TO MINIMIZE THE TRANSPORT OF SEDIMENT (MUD) ONTO THE PAVED ROAD BY USE OF APPROPRIATE BMPS SUCH AS A STABILIZED CONSTRUCTION ENTRANCE. IF SEDIMENT IS TRANSPORTED ONTO A ROAD SURFACE, THE ROADS SHALL BE CLEANED THOROUGHLY, AS A MINIMUM, AT THE END OF EACH DAY. SEDIMENT SHALL BE REMOVED FROM ROADS BY SHOVELING OR SWEEPING AND BE TRANSPORTED TO A CONTROLLED SEDIMENT DISPOSAL AREA. STREET WASHING SHALL BE ALLOWED ONLY AFTER SEDIMENT IS REMOVED IN THIS MANNER.
15. REMOVAL OF TEMPORARY BMPS. ALL TEMPORARY EROSION AND SEDIMENT CONTROL BMPS SHALL BE REMOVED WITHIN 30 DAYS AFTER FINAL SITE STABILIZATION IS ACHIEVED OR AFTER THE TEMPORARY BMPS ARE NO LONGER NEEDED. TRAPPED SEDIMENT SHALL BE REMOVED OR STABILIZED ON-SITE. DISTURBED SOIL AREAS RESULTING FROM REMOVAL OF TEMPORARY BMPS SHALL BE PERMANENTLY STABILIZED. THE REMOVAL OF TEMPORARY EROSION AND SEDIMENT CONTROL BMPS MAY NOT BE REQUIRED FOR THOSE PROJECTS, SUCH AS SINGLE FAMILY PLATS, THAT WILL BE FOLLOWED BY ADDITIONAL CONSTRUCTION UNDER A DIFFERENT PERMIT. IN THESE CIRCUMSTANCES, THE NEED FOR REMOVING OR RETAINING THE MEASURES WILL BE EVALUATED ON A SITE-SPECIFIC BASIS.
16. DEWATERING CONSTRUCTION SITES. DEWATERING DEVICES SHALL DISCHARGE INTO AN APPROPRIATE SEDIMENT TRAP OR POND, DESIGNED TO ACCEPT SUCH A DISCHARGE, PRECEDED BY ADEQUATE ENERGY DISSIPATION, PRIOR TO RUNOFF LEAVING THE SITE.
17. CONTROL OF POLLUTANTS OTHER THAN SEDIMENT ON CONSTRUCTION SITES. ALL POLLUTANTS OTHER THAN SEDIMENT THAT OCCUR ON-SITE DURING CONSTRUCTION SHALL BE HANDLED AND LEGALLY DISPOSED OF IN A MANNER THAT DOES NOT CAUSE CONTAMINATION OF STORM OR SURFACE WATERS. POLLUTANTS OF CONCERN INCLUDE, BUT ARE NOT LIMITED TO, FUELS, LUBRICANTS, SOLVENTS, CONCRETE BI-PRODUCTS AND CONSTRUCTION MATERIALS

MULCHING NOTES

1. MULCH MATERIALS USED SHALL BE STRAW OR HAY, AND SHALL BE APPLIED AT THE RATE OF 75-100 POUNDS PER 1000 SQ. FT. (APPX 2" THICK).
2. MULCHES SHALL BE APPLIED IN ALL AREAS WITH EXPOSED SLOPES GREATER THAN 2:1.
3. MULCHING SHALL BE USED IMMEDIATELY AFTER SEEDING OR IN AREAS WHICH CANNOT BE SEEDED BECAUSE OF THE SEASON.
4. ALL AREAS NEEDING MULCH SHALL BE COVERED BY NOVEMBER 1.

PLASTIC COVERING NOTES

1. PLASTIC SHEETING SHALL HAVE A MINIMUM THICKNESS OF 6 MILS AND SHALL MEET THE REQUIREMENTS OF THE STATE STANDARD SPECIFICATIONS SECTION 9-14.5.
2. COVERING SHALL BE INSTALLED AND MAINTAINED TIGHTLY IN PLACE BY USING SANDBAGS OR TIRES ON ROPES WITH A MAXIMUM 10-FOOT GRID SPACING IN ALL DIRECTIONS. ALL SEAMS SHALL BE TAPED OR WEIGHTED DOWN FULL LENGTH AND THERE SHALL BE A LEAST A 12 INCH OVERLAP OF ALL SEAMS.
3. CLEAR PLASTIC COVERING SHALL BE INSTALLED IMMEDIATELY ON AREAS SEEDED BETWEEN NOVEMBER 1 AND MARCH 31 AND REMAIN UNTIL VEGETATION IS FIRMLY ESTABLISHED.
4. WHEN THE COVERING IS USED ON UN-SEEDED SLOPES, IT SHALL BE KEPT IN PLACE UNTIL THE NEXT SEEDING PERIOD.
5. PLASTIC COVERING SHEETS SHALL BE BURIED TWO FEET AT THE TOP OF SLOPES IN ORDER TO PREVENT SURFACE WATER FLOW BENEATH SHEETS
6. PROPER MAINTENANCE INCLUDES REGULAR CHECKS FOR RIPS AND DISLODGED ENDS.

GRADING NOTES

THE CONTRACTOR SHALL NOTIFY THE ENGINEER IN THE EVENT OR DISCOVERY OF POOR SOILS, GROUNDWATER OR DISCREPANCIES IN THE EXISTING CONDITIONS AS NOTED ON THE PLANS.

1. MAXIMUM SLOPE STEEPNESS SHALL BE 2:1 (HORIZONTAL TO VERTICAL) FOR FILL SLOPES AND 2:1 FOR CUT SLOPES.
2. ALL AREAS RECEIVING FILL MATERIAL SHALL BE PREPARED BY REMOVING VEGETATION, NON-COMPLYING FILL, TOPSOIL AND OTHER UNSUITABLE MATERIAL, BY SCARIFYING THE SURFACE TO PROVIDE A BOND WITH THE NEW FILL, AND WHERE SLOPES ARE STEEPER THAN 3 HORIZONTAL TO 1 VERTICAL AND THE HEIGHT IS GREATER THAN 5 FT., BY BENCHING INTO SOUND COMPETENT MATERIAL AS DETERMINED BY A SOILS ENGINEER.

TEMPORARY EROSION AND SEDIMENTATION CONTROL MAINTENANCE REQUIREMENTS

1. EROSION AND SEDIMENTATION CONTROL FACILITIES SHALL BE INSPECTED AFTER EACH STORM EVENT AND DAILY DURING PROLONGED RAINFALL.
2. NECESSARY REPAIRS OR REPLACEMENT OF FACILITIES SHALL BE ACCOMPLISHED PROMPTLY.
3. SEDIMENT DEPOSITS SHALL BE REMOVED AFTER EACH STORM EVENT OR WHEN THE LEVEL OF DEPOSITION REACHES APPROXIMATELY ONE-HALF THE MAXIMUM POTENTIAL DEPTH.
4. SEDIMENT DEPOSITS REMAINING IN PLACE AFTER THE ESC FACILITIES ARE NO LONGER REQUIRED SHALL BE DRESSED TO CONFORM TO THE EXISTING GRADE, PREPARED AND SEEDED.
5. TEMPORARY EROSION AND SEDIMENTATION CONTROL FACILITIES SHALL BE MAINTAINED BY:

GENERAL EROSION AND SEDIMENTATION CONTROL NOTES

1. THE FOLLOWING EROSION AND SEDIMENTATION CONTROL NOTES APPLY TO ALL CONSTRUCTION SITE ACTIVITIES AT ALL TIMES, UNLESS OTHERWISE SPECIFIED ON THESE PLANS:
2. APPROVAL OF THIS EROSION AND SEDIMENTATION CONTROL PLAN DOES NOT CONSTITUTE AN ACCEPTANCE OF THE PERMANENT ROAD OR DRAINAGE DESIGN.
3. THE OWNER AND HIS/HER CONTRACTOR SHALL BE RESPONSIBLE AT ALL TIMES FOR PREVENTING SILT-LADEN RUNOFF FROM DISCHARGING FROM THE PROJECT SITE. FAILURE BY THE OWNER AND/OR CONTRACTOR CAN RESULT IN A FINE. THE DESIGNATED TEMPORARY CONTACT PERSON NOTED ON THIS PLAN MUST BE AVAILABLE FOR CONTACT BY TELEPHONE ON A 24 HOUR BASIS THROUGHOUT CONSTRUCTION AND UNTIL THE PROJECT HAS BEEN COMPLETED AND ACCEPTED BY THE COUNTY.
4. THE IMPLEMENTATION OF THESE ESC PLANS AND THE CONSTRUCTION, MAINTENANCE, REPLACEMENT AND UPGRADING OF THESE FACILITIES IS THE RESPONSIBILITY OF THE OWNER AND/OR CONTRACTOR FROM THE BEGINNING OF CONSTRUCTION UNTIL ALL CONSTRUCTION IS COMPLETED AND ACCEPTED BY THE COUNTY AND THE SITE IS STABILIZED.
5. PRIOR TO BEGINNING ANY WORK ON THE PROJECT SITE, A PRECONSTRUCTION CONFERENCE MUST BE HELD, AND SHALL BE ATTENDED BY THE GENERAL CONTRACTOR, THE PROJECT ENGINEER, REPRESENTATIVES FROM AFFECTED UTILITIES, AND A REPRESENTATIVE OF KITSAP COUNTY.
6. THE EROSION AND SEDIMENTATION CONTROL FACILITIES SHOWN ON THIS PLAN ARE TO BE CONSIDERED ADEQUATE BASIC REQUIREMENTS FOR THE ANTICIPATED SITE CONDITIONS. DURING CONSTRUCTION, DEVIATIONS FROM THIS PLAN MAY BE NECESSARY IN ORDER TO MAINTAIN WATER QUALITY. MINOR DEPARTURES FROM THIS PLAN ARE PERMITTED SUBJECT TO THE APPROVAL OF THE COUNTY INSPECTOR. HOWEVER, EXCEPT FOR EMERGENCY SITUATIONS, ALL OTHER DEVIATIONS FROM THIS PLAN MUST BE DESIGNED BY THE PROJECT ENGINEER AND APPROVED BY KITSAP COUNTY PRIOR TO INSTALLATION.
7. ALL EROSION AND SEDIMENTATION CONTROL MEASURES SHALL BE INSPECTED BY THE OWNER AND/OR CONTRACTOR ON A FREQUENT BASIS AND IMMEDIATELY AFTER EACH RAINFALL, AND MAINTAINED AS NECESSARY TO INSURE THEIR CONTINUED FUNCTIONING. ALL SEDIMENT MUST BE REMOVED FROM SILT FENCES, STRAW BALES, SEDIMENT PONDS, ETC. PRIOR TO THE SEDIMENT REACHING 1/3 ITS MAXIMUM POTENTIAL DEPTH.
8. AT NO TIME SHALL CONCRETE, CONCRETE BY-PRODUCTS, VEHICLE FLUIDS, PAINT, CHEMICALS, OR OTHER POLLUTING MATTER BE PERMITTED TO DISCHARGE TO THE TEMPORARY OR PERMANENT DRAINAGE SYSTEM, OR TO DISCHARGE FROM THE PROJECT SITE.
9. PERMANENT DETENTION/RETENTION PONDS, PIPES, TANKS OR VAULTS MAY ONLY BE USED FOR SEDIMENT CONTAINMENT WHEN SPECIFICALLY INDICATED ON THESE PLANS.

INSPECTION SCHEDULE

THE CONTRACTOR SHALL NOTIFY COMMUNITY DEVELOPMENT TO ARRANGE FOR INSPECTION OF THE VARIOUS PHASES OF WORK CHECKED BELOW. ALL INSPECTIONS SHALL BE COMPLETED PRIOR TO PROCEEDING WITH THE NEXT PHASE OF WORK.

1. CLEARING LIMITS.
2. IMPLEMENTATION OF THE VARIOUS PHASES OF THE EROSION AND SEDIMENTATION CONTROL PLAN.
3. PLACEMENT OF DRAINAGE STRUCTURES PRIOR TO BACK FILLING.
4. INSPECTION OF PREPARED SUB-GRADE.
5. INSPECTION OF GRAVEL PLACEMENT.
6. FINAL INSPECTION.

THE CONTRACTOR SHALL BE RESPONSIBLE FOR ALL WORK PERFORMED AND SHALL ENSURE THAT CONSTRUCTION IS ACCEPTABLE TO KITSAP COUNTY. IF INSPECTION IS NOT CALLED FOR PRIOR TO COMPLETION OF ANY ITEM OF WORK SO DESIGNATED, SPECIAL DESTRUCTIVE AND/OR NON-DESTRUCTIVE TESTING PROCEDURES MAY BE REQUIRED TO ENSURE THE ACCEPTABILITY OF THE WORK. IF SUCH PROCEDURES ARE REQUIRED, THE CONTRACTOR SHALL BE RESPONSIBLE FOR ALL COSTS ASSOCIATED WITH THE TESTING AND/OR RESTORATION OF THE WORK.

SILT FENCE NOTES

1. FILTER FABRIC SHALL BE PURCHASED IN A CONTINUOUS ROLL AND CUT TO THE LENGTH OF THE BARRIER TO AVOID USE OF JOINTS. WHEN JOINTS ARE NECESSARY, FILTER CLOTH SHALL BE SPLICED TOGETHER ONLY AT A SUPPORT POST, WITH A MINIMUM 6-INCH OVERLAP, AND SECURELY FASTENED AT BOTH ENDS TO POSTS.
2. POSTS SHALL BE SPACED A MAXIMUM OF 6 FEET APART AND DRIVEN SECURELY INTO THE GROUND (MINIMUM OF 30 INCHES).
3. A TRENCH SHALL BE EXCAVATED APPROXIMATELY 8 INCHES WIDE AND 12 INCHES DEEP ALONG THE LINE OF POSTS AND UPSLOPE FROM THE BARRIER. THIS TRENCH SHALL BE BACKFILLED WITH WASHED GRAVEL.
4. WHEN STANDARD STRENGTH FILTER FABRIC IS USED, A WIRE MESH SUPPORT FENCE SHALL BE FASTENED SECURELY TO THE UPSLOPE SIDE OF THE POSTS USING HEAVY-DUTY WIRE STAPLES AT LEAST 1 INCH LONG, TIE WIRES OR HOG RINGS. THE WIRE SHALL EXTEND INTO THE TRENCH A MINIMUM OF 4 INCHES AND SHALL NOT EXTEND MORE THAN 24 INCHES ABOVE THE ORIGINAL GROUND SURFACE.
5. THE STANDARD STRENGTH FILTER FABRIC SHALL BE STAPLED OR WIRED TO THE FENCE, AND 20 INCHES OF THE FABRIC SHALL BE EXTENDED INTO THE TRENCH. THE FABRIC SHALL NOT EXTEND MORE THAN 24 INCHES ABOVE THE ORIGINAL GROUND SURFACE. FILTER FABRIC SHALL NOT BE STAPLED TO EXISTING TREES.
6. WHEN EXTRA-STRENGTH FILTER FABRIC AND CLOSER POST SPACING IS USED, THE WIRE MESH SUPPORT FENCE MAY BE ELIMINATED. IN SUCH A CASE, THE FILTER FABRIC IS STAPLED OR WIRED DIRECTLY TO THE POSTS WITH ALL OTHER PROVISIONS OF ABOVE NOTES APPLYING.
7. FILTER FABRIC FENCES SHALL NOT BE REMOVED BEFORE THE UPSLOPE AREA HAS BEEN PERMANENTLY STABILIZED.
8. FILTER FABRIC FENCES SHALL BE INSPECTED IMMEDIATELY AFTER EACH RAINFALL AND AT LEAST DAILY DURING PROLONGED RAINFALL. ANY REQUIRED REPAIRS SHALL BE MADE IMMEDIATELY.
9. SILT FENCES WILL BE INSTALLED PARALLEL TO ANY SLOPE CONTOURS.
10. CONTRIBUTING LENGTH TO FENCE WILL NOT BE GREATER THAN 100 FEET.
11. DO NOT INSTALL BELOW AN OUTLET PIPE OR WEIR.
12. INSTALL DOWNSLOPE OF EXPOSED AREAS.
13. DO NOT DRIVE OVER OR FILL OVER SILT FENCES.

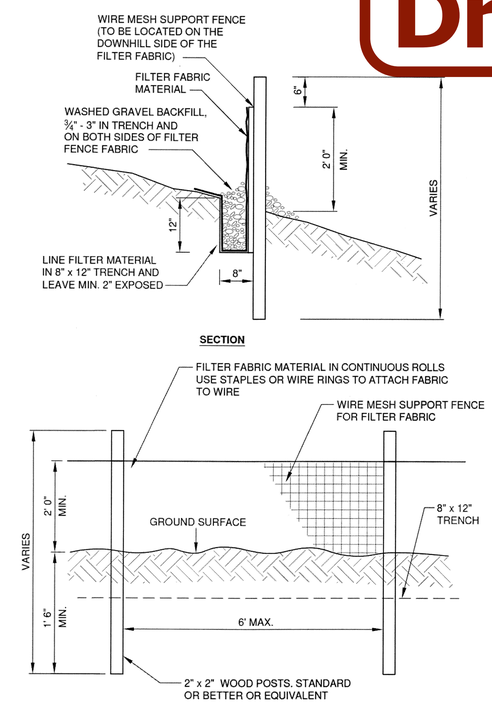

2 FILTER FABRIC FENCE DETAILS
NOT TO SCALE

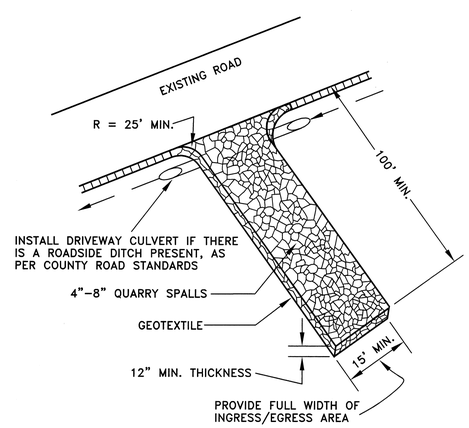

AS PER COUNTY ROAD STANDARDS, DRIVEWAYS SHALL BE PAVED TO THE EDGE OF R-O-W PRIOR TO INSTALLATION OF THE CONSTRUCTION ENTRANCE TO AVOID DAMAGING OF THE ROADWAY

IT IS RECOMMENDED THAT THE ENTRANCE BE CROWNED SO THAT RUNOFF DRAINS OFF THE PAD

1 CONSTRUCTION ENTRANCE
NOT TO SCALE

TOPOGRAPHY NOTE

EXISTING TOPOGRAPHY & BOUNDARY INFORMATION DEPICTED ON PLANS WAS OBTAINED COURTESY OF KITSAP COUNTY GIS. CONTRACTOR SHALL REVIEW INFORMATION AND VERIFY ALL IS CONSISTENT WITH ACTUAL FIELD CONDITIONS PRIOR TO BEGINNING CONSTRUCTION OR LAND DISTURBING ACTIVITIES. IF ACTUAL FIELD CONDITIONS DO NOT MATCH WHAT IS SHOWN ON THE PLANS, CONTRACTOR SHALL CONTACT PROJECT ENGINEER IMMEDIATELY FOR POSSIBLE DESIGN CHANGES AND/OR ADJUSTMENTS.

VERIFICATION NOTE

ALL EXISTING UTILITIES IN THE CONSTRUCTION AREA SHALL BE IDENTIFIED AND VERIFIED FOR DEPTH AND LOCATION PRIOR TO ANY CONSTRUCTION ACTIVITIES SO TO IDENTIFY ANY POTENTIAL CONFLICTS WITH PROPOSED CONSTRUCTION. CONTACT PROJECT ENGINEER IMMEDIATELY IF ANY CONFLICTS ARE IDENTIFIED.

PRIOR TO ANY CONSTRUCTION ACTIVITIES, VERIFY EXISTING TOPOGRAPHY IS CONSISTENT WITH WHAT IS SHOWN ON PLANS AND IF THERE ARE ANY POTENTIAL CONFLICTS WITH PROPOSED CONSTRUCTION ACTIVITIES. CONTACT PROJECT ENGINEER IMMEDIATELY IF ANY CONFLICTS ARE IDENTIFIED.

CALL 811 AT LEAST 48 HOURS BEFORE YOU DIG

REVISION	DESCRIPTION	DATE	BY

CONTOUR ENGINEERING • L.L.C
CIVIL ENGINEERS ~ SURVEYORS ~ LAND PLANNERS
Phone: 253-857-5454 ~ Fax: 253-509-0044 ~ info@contourplc.com
Mailing Address: P.O. Box 949, Gig Harbor, WA 98335
Physical Address: 4706 97th Street NW, Suite 100, Gig Harbor, WA 98332

BRETT M. ALLEN — STATE OF WASHINGTON — 37880 — REGISTERED PROFESSIONAL ENGINEER — 2/27/15

SHEET TITLE: NOTES AND DETAILS

UTF MINERAL RESOURCE DEVELOPMENT (PHASE 1)

CLIENT: UELAND TREE FARM LLC
6323 PIONEER WAY EAST
PUYALLUP, WA 98371

CONTACT: MARK MAUREN
PHONE: (253) 307-5900

DESIGNER: K. MAUREN
ENGINEER: B. ALLEN
DRAWN: K. MAUREN
S7 T24N R01E WM
DATE: 2.27.15
REVISED:

PROJECT: 15-009
DWG NAME: 15-009C

SHEET	REV.
C6	0
6 OF 7	

UELAND TREE FARM MINERAL RESOURCE DEVELOPMENT (PHASE 1)

A PORTION OF THE SE 1/4 OF SECTION 7, TOWNSHIP 24 NORTH , RANGE 1 EAST, W.M.
KITSAP COUNTY, WASHINGTON
NOTES AND DETAILS

Draft

GRAPHIC SCALE

0 20 40

1 INCH = 20 FEET (22"x34")
1 INCH = 40 FEET (11"x17")

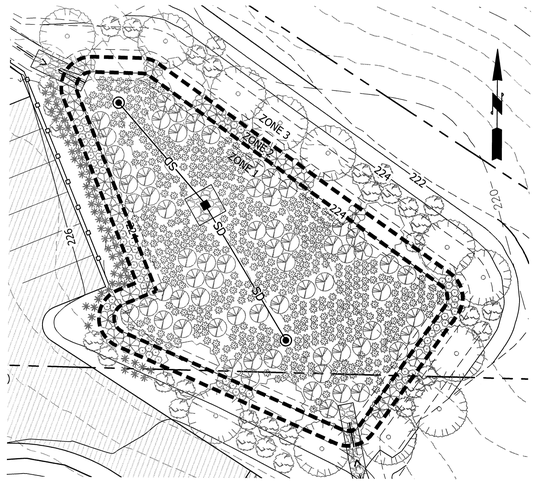

LEGEND

SHRUB	(ZONE 1)	PLANT 5-7 FT O.C.	
EMERGENT	(ZONE 1)	PLANT 2-3 FT O.C.	
TREE	(ZONE 2)	PLANT 15 FT O.C.	
SHRUB	(ZONE 2)	PLANT 5-7 FT O.C.	
EMERGENT	(ZONE 2)	PLANT 2-3 FT O.C.	
TREE	(ZONE 3)	PLANT 15 FT O.C.	
SHRUB	(ZONE 3)	PLANT 5-7 FT O.C.	
EMERGENT	(ZONE 3)	PLANT 2-3 FT O.C.	

BIORETENTION PLANTING ZONES SHALL BE PLANTED WITH A VARIETY OF SPECIES WITHIN THE BIORETENTION PLANT LIST FOUND ON THIS SHEET.

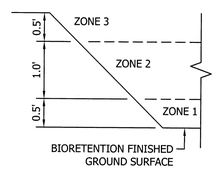

BIORETENTION PLANT LIST

ZONE 1

SHRUBS
- RED-OSIER DOGWOOD
- DWARF DOGWOOD
- YELLOW DOGWOOD
- LSANTI DOGWOOD
- BLACK TWINBERRY
- PACIFIC WAX MYRTLE
- PACIFIC NINEBARK
- CLUSTERED WILD ROSE
- DWARF ARCTIC WILLOW
- DOUGLAS SPIREA

EMERGENTS
- SLOUGH SEDGE
- SWABREAK SEDGE
- COMMON RUSH
- DAGGERLEAF RUSH
- SLENDER RUSH
- HARDSTEM BULRUSH
- SMALL-FRUTIED BULRUSH

ZONE 2

TREES
- PACIFIC SUNSET MAPLE
- WESTERN SERVICE BERRY
- BEAKED HAZELNUT
- BLACK HAWTHORN
- RAYWOOD ASH
- CASCARA SAGRADA
- SCOULER WILLOW
- SITKA WILLOW
- WESTERN RED CEDAR

SHRUBS
- VINE MAPLE
- DIANE WITCHHAZEL
- INDIAN PLUM
- MOCK-ORANGE
- BLACK SWAMP GOOSEBERRY
- NOOTKA ROSE
- RUGOSA ROSE
- THIMBLE BERRY
- SALMONBERRY
- RED ELDERBERRY
- SNOWBERRY
- RED HUCKLEBERRY

EMERGENT
- WESTERN COLUMBINE
- WILD GINGER
- COMMON CALIFORNIA ASTER
- DOUGLAS ASTER
- COMMON MAMAS
- GIANT CAMAS
- PACIFIC COAST IRIS
- GLADWIN IRIS
- SLENDER RUSH
- SIBERIAN IRIS
- FRINGECUP
- FOAMFLOWER
- YOUTH-ON-AGE
- VIOLETS

ZONE 3

TREES
- STRAWBERRY TREE
- INCENSE CEDAR
- HINOKI FLASE CYPRESS
- DOGWOOD
- SWISS MOUNTAIN PINE
- JAPANESE BLACK PINE
- BITTER CHERRY
- CHOKE CHERRY
- DOUGLAS-FIR
- OREGON WHITE OAK

SHRUBS
- OCEANSPRAY
- TALL OREGON GRAPE
- MOCK-ORANGE
- MUGHO PINE
- SHRUBBY CINQUEFOIL
- RED-FLOWERING CURRANT
- BALDHOP ROSE
- GLOSSY ABELIA
- COMPACT STRAWBERRY TREE
- ORCHID ROCKROSE
- WHITE ROCKROSE
- PINK PRINCESS
- DELAVAY OSMATHUS
- DEVIL WOOD
- RHODODENDRON
- EVERGREEN HUCKLEBERRY

EMERGENT
- KINNIKINNIK
- SALAL
- COASTAL STRAWBERRY
- SUNROSE
- LAVENDER
- OREGON GRAPE
- CREEPING MAHONIA
- DAVIDSON'S PENSTEMON

1 BIORETENTION PLANTING PLAN
NOT TO SCALE

ALSO SEE WSDOT STANDARD PLANS:
- B-30.10-01 RECTANGULAR FRAME (REVERSIBLE)
- B-30.50-01 RECTANGULAR HERRINGBONE GRATE
- B-30.70-03 CIRCULAR FRAME (RING) AND COVER
- B-30.90-01 MISCELLANEOUS DETAILS FOR DRAINAGE STRUCTURE

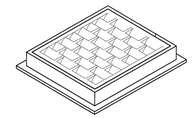

FRAME AND VANED GRATE

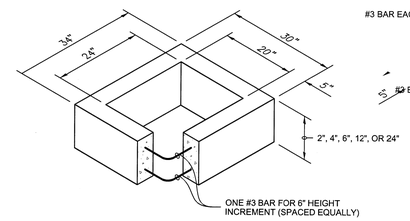

RECTANGULAR ADJUSTMENT SECTION

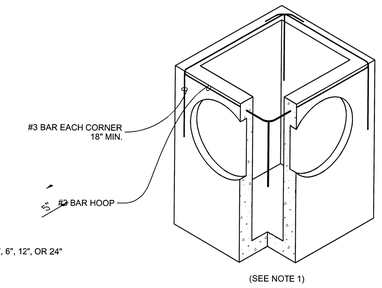

ALTERNATIVE PRECAST BASE SECTION

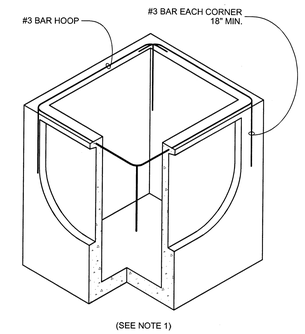

ALTERNATIVE PRECAST BASE SECTION

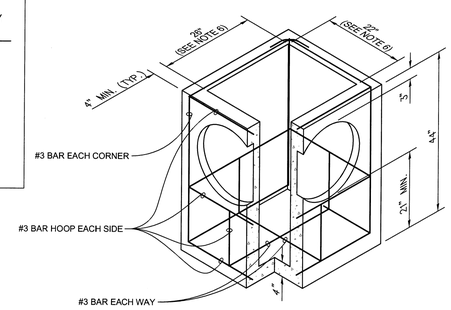

PRECAST BASE SECTION

2 TYPE-1 CATCHBASIN DETAIL
NOT TO SCALE WASHDOT STD PLAN DETAIL B-5.20-01

TYPE-1 AND TYPE-1L CATCHBASIN NOTES

1. As acceptable alternatives to the rebar shown in the PRECAST BASE SECTION, fibers (placed according to the Standard Specifications), or wire mesh having a minimum area of 0.12 square inches per foot shall be used with the minimum required rebar shown in the ALTERNATIVE PRECAST BASE SECTION. Wire mesh shall not be placed in the knockouts.
2. The knockout diameter shall not be greater than 20". Knockouts shall have a wall thickness of 2" minimum to 2.5" maximum. Provide a 1.5" minimum gap between the knockout wall and the outside of the pipe. After the pipe is installed, fill the gap with joint mortar in accordance with Standard Specification 9-04.3.
3. The maximum depth from the finished grade to the lowest pipe invert shall be 5'.
4. The frame and grate may be installed with the flange down, or integrally cast into the adjustment section with flange up.
5. The Precast Base Section may have a rounded floor, and the walls may be sloped at a rate of 1:24 or steeper.
6. The opening shall be measured at the top of the Precast Base Section.
7. All pickup holes shall be grouted full after the basin has been placed.

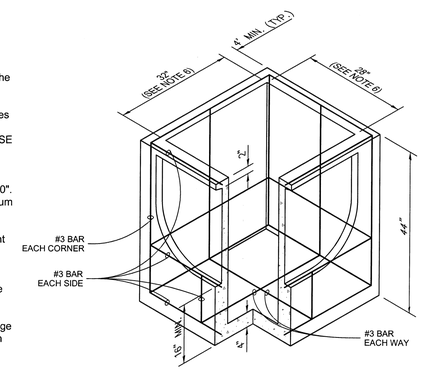

PRECAST BASE SECTION

3 TYPE-1L CATCHBASIN DETAIL
NOT TO SCALE WASHDOT STD PLAN DETAIL B-5.40-01

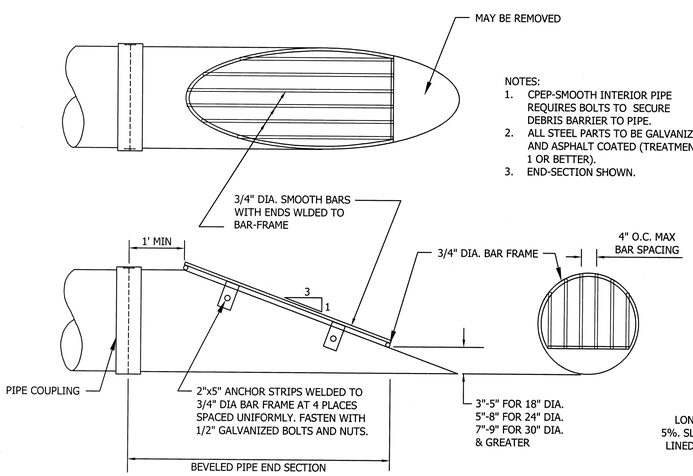

NOTES:
1. CPEP-SMOOTH INTERIOR PIPE REQUIRES BOLTS TO SECURE DEBRIS BARRIER TO PIPE.
2. ALL STEEL PARTS TO BE GALVANIZED AND ASPHALT COATED (TREATMENT 1 OR BETTER).
3. END-SECTION SHOWN.

4 DEBRIS BARRIER DETAIL
NOT TO SCALE

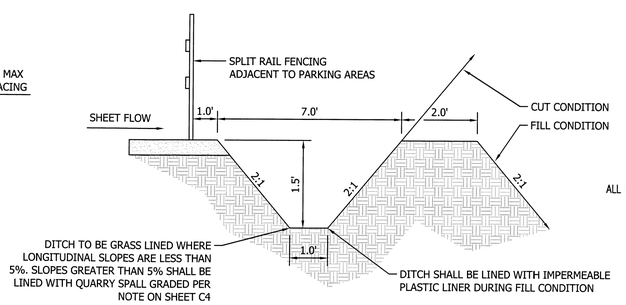

5 DITCH DETAIL
NOT TO SCALE

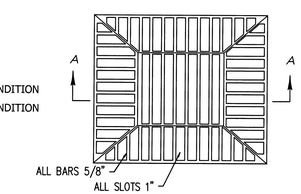

PLAN

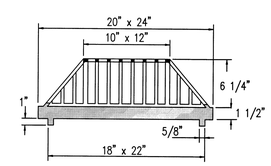

SECTION A–A

NOTES:
1) USE WITH STANDARD PLAN B–2a FRAME.
2) MATERIAL TO CONFORM TO WSDOT STANDARD SPECIFICATIONS 9–05.15(2).

6 BEEHIVE GRATE
NOT TO SCALE

TOPOGRAPHY NOTE

EXISTING TOPOGRAPHY & BOUNDARY INFORMATION DEPICTED ON PLANS WAS OBTAINED COURTESY OF KITSAP COUNTY GIS. CONTRACTOR SHALL REVIEW INFORMATION AND VERIFY ALL IS CONSISTENT WITH ACTUAL FIELD CONDITIONS PRIOR TO BEGINNING CONSTRUCTION OR LAND DISTURBING ACTIVITIES. IF ACTUAL FIELD CONDITIONS DO NOT MATCH WHAT IS SHOWN ON THE PLANS, CONTRACTOR SHALL CONTACT PROJECT ENGINEER IMMEDIATELY FOR POSSIBLE DESIGN CHANGES AND/OR ADJUSTMENTS.

VERIFICATION NOTE

ALL EXISTING UTILITIES IN THE CONSTRUCTION AREA SHALL BE IDENTIFIED AND VERIFIED FOR DEPTH AND LOCATION PRIOR TO ANY CONSTRUCTION ACTIVITIES SO TO IDENTIFY ANY POTENTIAL CONFLICTS WITH PROPOSED CONSTRUCTION. CONTACT PROJECT ENGINEER IMMEDIATELY IF ANY CONFLICTS ARE IDENTIFIED.

PRIOR TO ANY CONSTRUCTION ACTIVITIES, VERIFY EXISTING TOPOGRAPHY IS CONSISTENT WITH WHAT IS SHOWN ON PLANS AND IF THERE ARE ANY POTENTIAL CONFLICTS WITH PROPOSED CONSTRUCTION ACTIVITIES. CONTACT PROJECT ENGINEER IMMEDIATELY IF ANY CONFLICTS ARE IDENTIFIED.

CALL 811 AT LEAST 48 HOURS BEFORE YOU DIG

REVISION	DESCRIPTION	DATE	BY

CONTOUR ENGINEERING • LLC
CIVIL ENGINEERS ~ SURVEYORS ~ LAND PLANNERS
Phone: 253-857-5454 ~ Fax: 253-509-0044 ~ info@contourplic.com
Mailing Address: P.O. Box 949, Gig Harbor, WA 98335
Physical Address: 4706 97th Street NW, Suite 100, Gig Harbor, WA 98332

BRETT M. ALLEN — STATE OF WASHINGTON — 37800 — REGISTERED PROFESSIONAL ENGINEER — 2/27/15

SHEET TITLE: NOTES AND DETAILS

UTF MINERAL RESOURCE DEVELOPMENT (PHASE 1)

CLIENT: UELAND TREE FARM LLC, 6323 PIONEER WAY EAST, PUYALLUP, WA 98371

CONTACT: MARK MAUREN PHONE: (253) 307-5900

DESIGNER: K. MAUREN
ENGINEER: B. ALLEN
DRAWN: K. MAUREN
S7 T24N R01E WM
DATE: 2.27.15
REVISED:

PROJECT: 15-009
DWG NAME: 15-009C

SHEET	REV.
C7	0
7 OF 7	

L:\PROJECT FILES\15-009 UTF Trailhead\DRAWINGS\15-009C.dwg, 2/27/2015 8:24:09 AM